PROCEEDING

# NATIONAL CONFERENCE ON EXCELLENCE IN DESIGN, MANUFACTURING & AUTOMATION

Ichalkaranji, Maharashtra, India

26th & 27th April, 2018

# NCEDMA 2018

ISSN : 2394-8426, Special Issue
Indexed on : Copernicus International
Research Gate
UGC Approved Journal Sr. No. 48455

DKTE
Promoting Excellence in
Teaching, Learning & Research

Organized by :

**Department of Mechanical Engineering**

D. K. T. E. Society's

**Textile & Engineering Institute, Ichalkaranji**

www.dktes.com

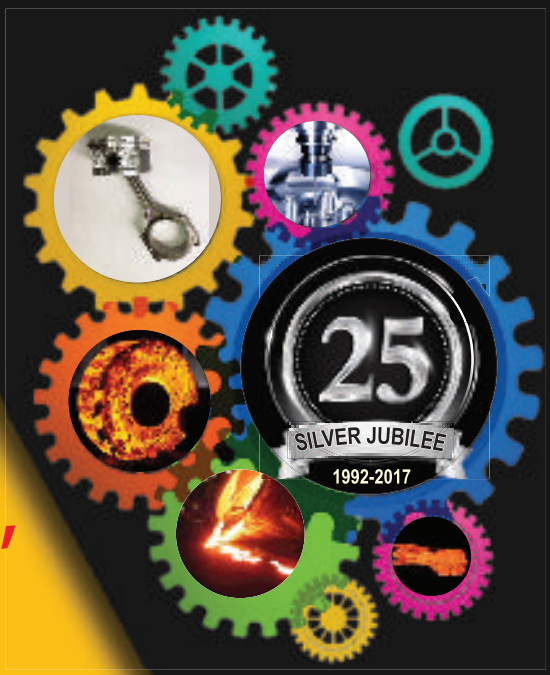

DKTE
Promoting Excellence in
Teaching Learning & Research

## About Institute :

D. K. T. E. Society's Textile and Engineering Institute was established in 1982, catering to the needs of the industry for the past three decades. Institute secured Autonomous Status from Shivaji University Kolhapur UGC in 2015. Also Institute has A+ NAAC accreditation. Various programmes are accredited by National Board of Accreditation, New Delhi. Institute caters to 10 UG, 6 PG and 3 Ph.D. programmes in various disciplines of Engineering and Textiles. Institute has strong linkage with industries and institutions of national and international reputations from India and abroad.

## About Department :

Department of Mechanical Engineering was founded in 1992. During the period 1992-2017, the department has so far produced more than thousands Mechanical graduates. Many of them have assumed esteemed position and illustrious records of achievements, for higher studies in India and abroad. Department has been awarded NBA Accreditation 3rd time by National Board of Accreditation, New Delhi. Presently department is having 120 intake at UG and 18 intake at PG Programme in Mechanical (Product Design and Development) and has Shivaji University Kolhapur approved research center. Also department is recipient of various funded projects by AICTE and DST.

# Director Message

**Dr. P. V. KADOLE**
**Director,**
D.K.T.E. Society's
Textile & Engg. Institute,
Ichalkaranji.

Warm and Happy greeting to all. I am immensely happy that the Department of Mechanical Engineering of our college is organizing a "National Conference on excellence in Design Manufacturing & Automation (NCEDMA-2018)" on 26th and 27th April 2018 and is going to present a collection of various technical papers in the proceedings.

Research is a continuous process, through which many developments takes place for a better life in the world. The purpose of this conference is to bring together researchers, experts from industry, academia, and other interested organizations to meet, exchange information and ideas in developments in the field of Design, Manufacturing and Automation in Mechanical Engineering. It brings together the latest developments in mechanical related technologies; engineering solutions, and academic research results. The conference program has been designed to provide generous opportunities to researchers to share their ideas and research.

I am delighted by the enthusiastic response of authors in submitting excellent research papers to this conference. It is strongly believed that this proceeding will serve as an example to demonstrate the depth of current innovations and research and also acts as a reliable source of information for making advances in Mechanical Engineering.

I would like to express my appreciation to the Technical Program Chairs, for their valuable contribution in assembling the high quality conference program. A conference of this size relies on the contributions of many volunteers, and I would like to acknowledge the efforts of our reviewers, faculty members and referees for their help. I am also grateful to all the authors who trusted the conference with their work.

I look forward to an exciting days of insightful presentations, discussions and sharing of technical ideas with researcher. I thank you for attending the conference and I hope that you enjoy your visit to DKTE society's Textile and Engineering Institute, Ichalkaranji.

I express my sincere thanks to our chairman, Hon. Mr. Kallappanna Awade; Former Textile Minister, Hon. Mr. Prakash Awade; Secretary, Hon. Dr. Mrs. Sapna Awade and Treasurer, Hon. Mr. R. V. Ketkar for all the support to organize this conference.

# Convener Message

**Dr. V. R. NAIK**
Convener &
Head of Dept. of Mech. Engg.

I feel extremely, happy to have an opportunity to work as Convener for such prestigious event, hosted by Department of Mechanical Engineering, D. K. T. E. Society's Textile and Engineering Institute Ichalkaranji.

Since Department of Mechanical Engineering celebrating Silver Jubilee this year, many activities were planned by Department. Entire year we were busy in planning and executing many activities. We are concluding this year with the "National Conference on Excellence in Design, Manufacturing and Automation (NCEDMA-2018)".

In the context of global competition and with implementation of industry 4.0 like standards, excellence in every field is must with this intention the theme for conference is chosen was Excellence in Design, Manufacturing and Automation.

This Symposium received overwhelming response from various institutes from states of India. This will be a platform to share the views, exchange thoughts of various themes under focus. Also participants will get an opportunity to listen to the practicing engineers, eminent speakers which will enrich their knowledge and also provide them valuable guidance.

On behalf of the organizing team, I am thankful to the members of the advisory committee for their valuable guidance and support. We are also thankful to the guest and key note speakers for their contribution to the conference. We do not want to miss the opportunity to thank the members of panel discussions for enriching the knowledge of participants with their view points. We are thankful to the Management and Director of D. K. T. E. Society's Textile and Engineering Institute for their support and motivation for organizing this conference.

We take this opportunity to thank our sponsors, who made it possible to organize this symposium to this scale. Last but not the least, we are thankful to our team members from Department of Mechanical Engineering who toiled very hard and worked in various committee's to make this event a grand success.

# Co-ordinators Message

**Mr. P. N. GORE**
Associate Professor
Dept. of Mech. Engg.

**Mr. U. S. KHADE**
Assistant Professor
Dept. of Mech. Engg.

It gives us immense pleasure and satisfaction to write a preface to the proceeding national conference on, "Excellence in Design Manufacturing & Automation" (NCEDMA2018). This time it was altogether a different exciting experience with organizing committee members who are very hard working, enthusiastic and sincere.

The specialty of this conference is that it is being organized on the occasion of Silver jubilee celebration of Mechanical Department. The selected papers are published as special proceeding in UGC enlisted journal with indexing in Google scholar, IIJIF, GIF and Index Copernicus. So the response for the call for papers was overwhelming. Though we received a large number of research papers from Maharashtra. Only about 60 number of high quality peer reviewed papers were finally selected for presentation and publishing in National Conference.

We are deeply indebted to Hon. Director and Deans for their constant support and encouragement throughout the bringing out this proceeding and making this conference a big success. We must mention the all faculty members of Mechanical Department for their painstaking effort for rigorous review work and shaping the conference and proceeding. Finally we are also thankful and grateful to the authors, organizing committee members, advisory board, and review committee and supporting staff for their kind co-operation.

# EDITORIAL BOARD

# National Conference on Excellence in Design, Manufacturing and Automation (NCEDMA-2018)

## INDEX

**M 101**

# Review of Errors Affecting the Accuracy, Repeatability and Precision of Metrological System

V. R. Kamble, PG Student, DKTE's Textile and Engineering Institute, Ichalkaranji, India.
Email: varshakamble49@gmail.com

P. N. Gore, Professor, DKTE's Textile and Engineering Institute, Ichalkaranji, India.
Email: purushottamgore@yahoo.com

***Abstract*—Measurement and quality control is one of the important part of production process which can be performed through many possible ways with different measuring equipments and measuring gauges.The paper is focused on types of errors affect on metrological system. It reviews the important fundamental terms of metrological system and the factors affecting on it. This paper gives introductory information about the error detection techniques at early design stage.**

***Keywords—metrology; measurement; measured value; actual value; error; accuracy; repeatability; precision***

## INTRODUCTION (*HEADING 1*)

Metrology can be defined as science of measurement. People learn to measure centuries before they learn how to talk and how to write and it was trough measurement that people learn to count. Measurement is nothing but assigning a number to object in order to numerically represent properties they have. Measurement of any amount is based on some international standards which are completely accurate when compare with others. An error may be defined as difference between measured value and actual value generally measurement of any quantity is done by comparing it with derived standards with which they are not completely accurate. Thus the errors in measurement are most of times not only due to errors in measurement, but are also due to deviation being not done perfectly well. So 100 percent measurement is not possible with any method. There are many factors that come into play that causes the error and affect the accuracy, repeatability and precision in metrology system.

## IMPORTANT TERMS IN METROLOGY SYSTEM

### *Repeatability*

Repeatability of measurement system can be defined by taking number of measurements in same condition by same person with same instrument. Repeatability is nothing but reproducibility same results.

### *Accuracy*

Accuracy of measurement system can be defined as closeness of measurements of quantity to that of quantity's true value. Accuracy can also be defined as the uncertainty in measurement with respect to an actual measurement or absolute standards. Closeness of measured value to the standard or known value is also known as accuracy.

### *Precision*

Precision of measuremnt system can be defined as closeness of two or more measurements to each other.

## ERRORS IN MEASUREMNT SYATEM

An error in measurement system may be defined as difference between the measured value and the actual value. Sequentially, to understand the concept of error in measurement, you should know the two terms that define the error. They are true value and measured value. It may be defined as the estimated values of true values can be found by taking several measured values during an experiment.

Types of errors in measurement system

Generally errors are classified into three types:

- Gross Error
- Blunders
- Measurement Errors

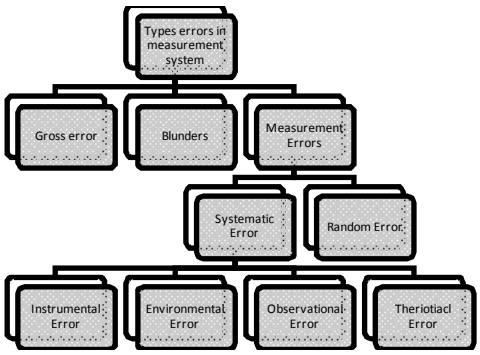


### *Gross Error*

Gross error is caused due to mistake in using instruments or equipment during measurement and also due to mistakes in recording result data. The example of these types of errors is a person or operator reading vernier caliper 54.70mm as 54mm. it may be due to not knowing how to use vernier caliper or also due to not properly remembering data at the time of taking down reading, writing and calculating, and then presenting the

wrong data at later time. This is the reason for gross error in this case in the reported data, and such error may end up in calculation of the final results, thus deviating results from actual value.

*Blunders*

Blunders are final source of errors and these errors are caused by faulty recording or due to a wrong value while recording a measurement, or misreading a scale or forgetting a digit while reading a scale. These blunders should stick out like sore thumbs if one person checks the work of another person. It should not be comprised in the analysis of data.

*Equations*

The measurement error is the result of the variation of measurement of the true value. The example of measurement error is, if electronic scale is loaded with 1kg standard weight and the reading is 1002gms, then the measurement error is 2gms. Measurement errors are classified into two types:

- Random Error
- Systematic Error

- Random Error:

Random errors are caused by sudden change in experimental condition and noise and tiredness in working person. These errors are either positive or negative. An example of random error is during change in humidity, unexpected change in humidity, unexpected change in temperature and fluctuation in voltage.

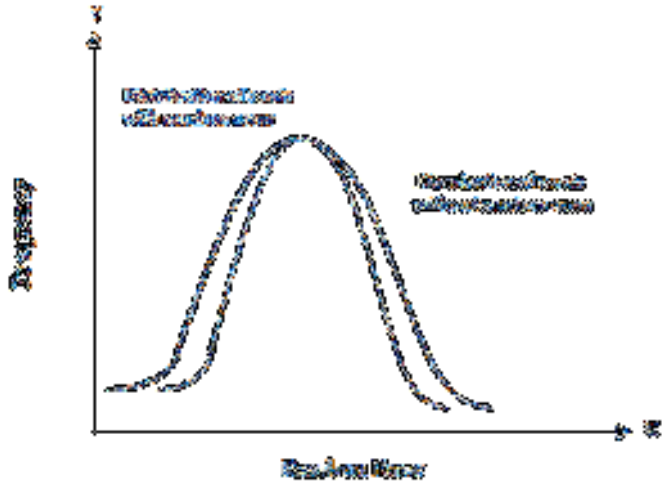

- Systematic Error:

The systematic errors that occur due to fault in measuring device are known as systematic error. Usually they are called as Zero error – Positive or Negative error. These errors can be detached by correcting the measurement device. These errors may be classified into different categories.

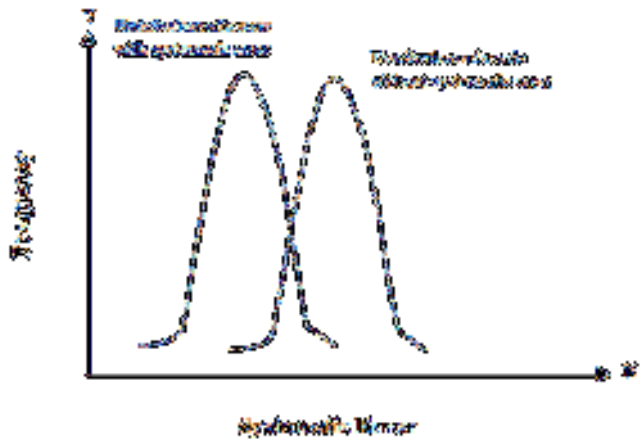

In order to understand concept of systematic error, let us classify the error as:

- Instrumental error
- Environmental error
- Observational error
- Theoretical error

1) Instrumental Error

Instrumental errors occur due to wrong construction of the measuring instruments.These errors may occur due to wrong construction of measuring instruments. These errors may occur due to hysteresis or friction. These types of error include loading effect and misuse of the instruments. In order to reduce the gross error in measurement, different correction factors must be recalibrated carefully.

2) Environmental Error

The environmental errors occur due to same external condition of instrument. External condition mainly includes pressure, temperature, humidity or due to magnetic field.

3) Observational Error

As the name suggests, the type of error occur due to wrong observation or reading in the instrument particularly in case of energy meter reading. The wrong observation may be due to ‘Parallax’. In order to reduce parallax error highly accurate meter are needed; meters provide with mirror scale.

4) Theoretical Error

Theoretical errors are caused by simplification of model system. For example, a theory states that the temperature of the system surrounding will not change the readings taken when it actually dose, then this factor will begin a source of error in measurement.

*Error motion*

Error motions are another type of errors that affects greatly on repeatability, accuracy and precision in measurement system. Error motions are due to change in position relative to reference coordinate axis or the surface of perfect work piece with its centreline coincident with the axis of rotation. Error motion are specified as to location and direction and do not include motion due to thermal drift.

- Errors in linear movement:
  1) Two straightness errors motion
  2) Two roll error motion
  3) Two tilt error motion

- Errors in rotational moment
  1) Two radial errors motion
  2) One axial error motion
  3) One angular error motion
  4) Two tilt error motion

Simple three axis machine has total 21 terms of error motion these are such as:

❖ Six terms of error motion per axis; therefore there are totally 18 terms of error motion for 3 axis machine:

1) Error in X – axis:
   - Position deviation in X – axis direction
   - Straightness deviation in Y – axis direction
   - Straightness deviation in Z – axis deviation
   - Roll around X – axis
   - Pitch around Y – axis
   - Yaw around Z – axis

2) Errors in Y – axis:
   - Position deviation in Y – axis direction
   - Straightness deviation in X – axis direction
   - Straightness deviation in Z – axis direction
   - Roll around Y – axis
   - Pitch around X – axis
   - Yaw around Z – axis

3) Errors in Z – axis:
   - Position deviation in Z – axis direction
   - Straightness deviation in X – axis direction
   - Straightness deviation in Y – axis direction
   - Roll around Z – axis
   - Pitch around X – axis
   - Yaw around Y – axis

❖ Three extra error motion terms are required to completely the axis relationship

Squareness
Parallelism
Angularity

ERROR BUDGETING

Error budgeting is an important tool to detect possibilities of errors at early stage of design. In order to investigate design concepts in more detail instead of going for solid models and complicated finite element analysis; error budgeting is good option. Error budgeting is low cost and less time consuming technique which can be helpful to investigate design ideas and different design options. Error budgets are beneficial for predicting the accuracy and repeatability of the machine. They are also good for predicting misalignment loads on bearing.

- Procedure Of Formulating System Error Budget

An error budget is based on two rules connectivity rules and combinational rules. Connectivity rule defines the behaviour of machine components with their interfaces, and the combinational rules describe how the errors of different types are to be combined.

1) Step first: Homogeneous Transformation Matrix (HTM). Homogeneous transformation matrix helps to investigate whole geometry of machine. In this step kinematic model of system develops in the form of series of HTM's.
2) Step second: Systematic analysis of each type of error that can occur in system and use the HTM model to determine the effect of error on position accuracy with respect to each other.

## V. CONCLUSION

This paper gives information about the important terms considered while deigning the metrology system. It also provides detail information about errors which affects on the performance of metrology system. There are lots of chances to totally eliminate gross and blunder errors by providing useful and skillful knowledge about instruments and by regular calibration of instruments. In case of systematic errors; prediction of random error is not easy and also difficult to totally eliminate. Analysis and predication of systematic error is possible hence with the help of software knowledge effect of systematic errors on metrology system can be reduced. Error motion is an important term in mechanical engineering it provides valuable about position errors while machine in motion. Early detection and prevention of motion error is important step during design stage. Error budget helps to detects possibilities of error at early design stage. It also helps narrowing the stage of conceptual design. This low cost, less time required process helps predict possibilities errors and also to select best design concept ideas.

## REFERENCES


[1] P. Majda, "Relation between kinematic straightness error and angular error of machine tool," Advances in manufacturing science and technology, vol. 36, no.1, 2012.

[2] G. Harmann "Geometric error correction in coordinate measurement,"Advances in manufacturing science and technology, vol.36, no.1, 2007.

[3] D. Jastrzebski, P. Powelko, G. Szwengier, "Modeling the effect of geometric error on the static characteristic of guide rail system," Advances in manufacturing sciience and technology, vol.36, no.2 2007.

[4] H. Schwentric, W. Knapp, H. Haitjema, "Geometric error measurement and compensation of machine –an update" Manufacturing technology, vol.57, pp.660-675, 2008.

[5] Y. Liang, Y. Wang, A. Yin, L. Zu, "Modeling and error analysis of the parallelism mesasurement for linear rolling guide pair," International journal of material, mechanics and manufacturing, vol.4, no.1, feb201

**M103**

# A Review on Six Stroke I. C. Engine

Koyal Suryawanshi & Sonali Jadhav and Prof. V.B. Magdum.
Department Of Mechanical Engineeering
D.K.T.E.I, Ichalkarnji

**Abstract: Large amount of heat is wasted in four stroke engine, a six stroke internal combustion engine overcomes the drawback of low thermal efficiency in case of four stroke engine. In case of six stroke engine, power is developed twice in a cycle of six strokes. This engine generates more power with higher fuel efficiency than the existing engines. As a result a new engine concept is formed, which is six stroke engine. The power stroke is obtained once during the two cycles in four stroke engine. In six stroke engine the power stroke is obtained two times out of six strokes. Fresh air is injected into cylinder during exhaust stroke, which expand by heat and therefore forces the piston down for an additional stoke and yhis gives an extra power stroke. The six stroke engine is thermodynamically more efficient. Thus, the engine seems to show 40% reduction in fuel consumption, dramatic reduction in air pollution, 0adaptibility to multi fuel operation. That improves the thermal efficiency reaching upto 50% and 30% for actual internal combustion. Lot of research work is going to be conducted on this topic nowadays.**

**Key-words : Multi-fuel operation ,thermal efficiency ,two stroke ,four stroke**

## 1.INTRODUCTION

Large amount of heat is wasted in four stroke engine, A six stroke internal combustion engine overcomes the drawback of low thermal efficiency in case of four stroke engine.
In case of six stroke engine, power is developed twice in a cycle of six strokes. This engine generates more the increase in thermal efficiency. In the present time internal combustion engine, important calorific losses are generated due to the required cooling of the combustion chamber walls.

The six-stroke engine has the following advantages:

1. Thermal efficiency reaching 50%. (30% for the actual internal combustion engines)
2. Fuel consumption reduced by more than 40%.
3. Reduction of chemical, noise and thermal pollution.
4. Two expansions (work) through six strokes.
5. Direct injection and optimal fuel combustion at every engine speed.

In six-stroke cycle, two parallel functions occur in two chambers which result in eight event cycle: four event internal combustion cycle and four event external combustion cycles. [1]

## 2.Working

The six-stroke engine consists of six stroke and these are shown in figure the each figure shows the movement of the air-fuel mixture, valves and piston. The name of the components are-

1. Intake valve
2. Heating chamber valve
3. Combustion chamber valve
4. Exhaust valve
5. Cylinder
6. Combustion chamber
7. Air heating chamber
8. Wall of combustion chamber
9. Fuel injector
10. Heater plug

**Stroke-1** : The inlet valve is kept open. Due to cranking, Piston moves downward which results in the formation of a pressure difference due to which pure air enters the cylinder

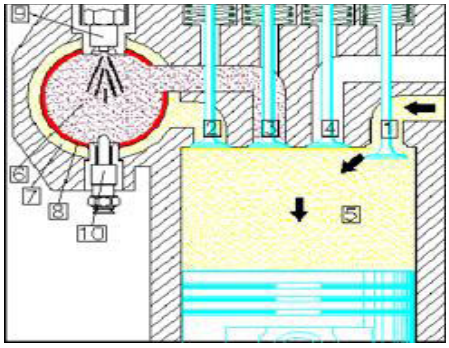

**Fig:** Intake of pure air in cylinder

**Stroke-2**

The inlet valve closes and the heating chamber valve opens. The piston moves upward due to cranking forcing air into heating chamber. The air at this stage is converted to high pressure.

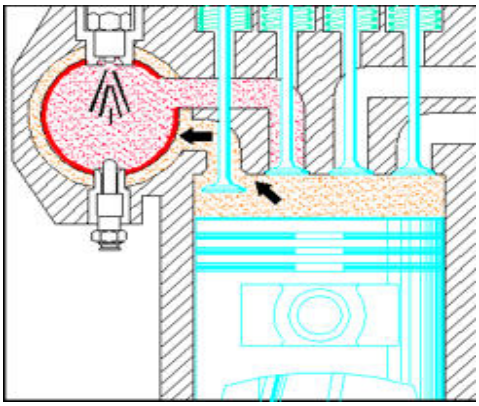

**Figure:** Compression of pure air in heating chamber

**Stroke 3**:

The combustion chamber valves opens and gases of combustion enter in the cylinder

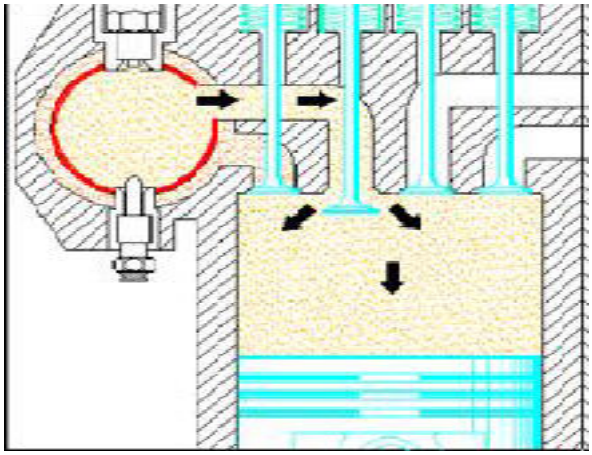

**Figure:** Compression of pure air in heating chamber

**Stroke 4** :

Exhaust valve opens. Pistons moves upward and exhaust gases are removed via this valve.

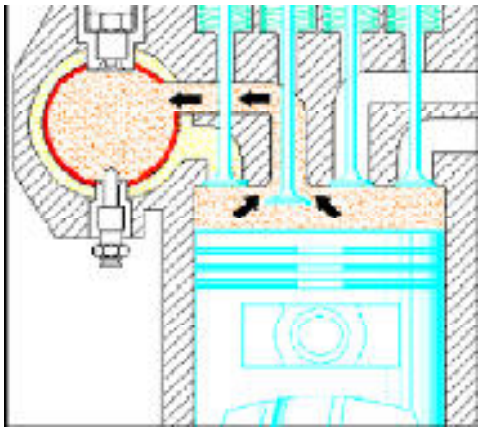

**Figure:** Recompression of the pure air in chamber

**Stroke 5** :
The chamber valve opens and the pure air now at high pressure and high temperature enters the cylinder which does work on the piston and hence it moves downward resulting in the 2nd power stroke.

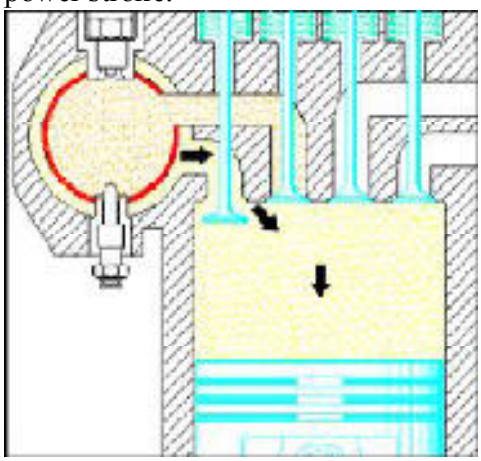

**Figure:** Release of pure air into cylinder

**Stroke-6** Finally the combustion chamber valve opens. The piston moves upwards forces the pure air into the combustion chamber.

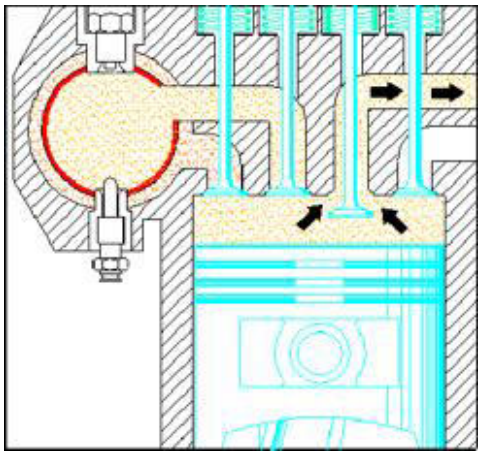

**Figure:** Exhaust of combustion gases [2]

## 3.TYPES OF SIX STROKE ENGINE

A Single piston designs

These designs use a single piston per cylinder, like a conventional two- or four-stroke engine. A secondary, nondetonating fluid is injected into the chamber, and theleftover heat from combustion causes it to expand for a second power stroke followed by a second exhaust stroke.

A.1 Griffin six-stroke engine

Heated exhaust-jacketed external vapuriser, into which fuel was sprayed, was the main principle of working of griffin six stroke engines. The temperaturewas held around 550 °F, sufficient to vapourise the oil but not tobreak it down chemically. This fractional distillation supported the use of heavy oil fuels, the unusable tars and asphalts separating out in the vapouriser.

A.2 Bajulaz six-stroke engine

The Bajulaz six-stroke engine is similar to aregular combustion engine in design. There are, however, modifications to the cylinder

head, with two supplementary fixed capacity chambers: a combustion chamber and an air preheating chamber above each cylinder. The combustion chamber receives a charge of heated air from the cylinder;
the injection of fuel begins an isochoric (constant-volume) burn which increases the thermal efficiency compared to a burn in the cylinder.

A.3 Velozeta six-stroke engine

In a Velozeta engine, fresh air is injected into the cylinder during the exhaust stroke, which expands by heat and therefore forces the piston down for an additional stroke. The valve overlaps have been removed and the two additional strokes using air injection provide for better gas scavenging.

A.4 NIYKADO Six Stroke Engine

This is the only engine that is categorizedas a fully working prototype. The first prototype was developed in 2004, which used only two valves. The second prototype, developed in 2007, was an improved design using four valves.

A.5 Crower six-stroke engine

In a six-stroke engine prototyped in the United States by Bruce Crower, water is injected into the cylinder after the exhaust stroke and is instantly turned to steam, which expands and forces the piston down for an additional power stroke. Thus, waste heat that requires an air or water cooling system to discharge in most engines is captured and
put to use driving the piston

B Opposed piston designs

These designs use two pistons per cylinder operating at different rates, with detonation occurring between the pistons.

B.1 Beare Head

The term "Six Stroke" was coined by the inventor of the Beare Head, Malcolm Beare. The technology combines a four stroke engine bottom end with an opposed piston in the cylinder head working at half the cyclical rate of the bottom piston. Functionally, the second piston replaces the valve mechanism of a conventional engine.

B.2 M4+2

The M4+2 engines have much in common with the Beare Head engines, combining two opposed pistons in the same cylinder. One piston works at half the cyclical rate of the other, but while the main function of the second piston in a Beare Head engine is to replace the valve mechanism of a conventional four stroke engine, the M4+2 takes the principle one step further.

B.3 Piston charger engine

In this engine, similar in design to the Beare head, a "piston charger" replaces the valve system. Piston charger perform the work of charging the main cylinder and simultaneously it control the inlet and outlet opening which leads to no loss of air and fuel in the exhaust. In the main cylinder, combustion takes place every turn as in a twostroke engine and lubrication as in a four-stroke engine. Fuel injection can take place in the piston charger, in the gas transfer channel or in the combustion chamber.

## 4.MODIFICATION IN SIX STROKEENGINE

Modifications are done to specific parts of conventional four stroke engine so that the new engine with six strokes works successfully. These modifications are:

1) Crankshaft to Camshaft Ratio Modification

In conventional four stroke engine, the gear at crankshaft must rotate 720o while thecamshaft rotates 360o to
complete one cycle. For six-stroke engine, the gear at the Crankshaft must rotate 1080o to rotate the camshaft 360o and complete one cycle.
Hence their corresponding gear ratio is 3:1.

2) Camshaft Modification

In the six stroke engine the 360 degree of the cam has been divided into 60 degree among the six-strokes. The exhaust cam has 2 lobes to open the exhaust valve at fourth stroke (first exhaust stroke) and at the sixth stroke to push out the steam.[1]

## 5. FACTORS AFFECTING THERMALEFFICIENCY AND FUELCONSUMPTION

1) The heat that is evacuated during the cooling of aconventional engine's cylinder head is recovered inthe six-stroke engine by the air-heating chamber surrounding the combustion chamber.

2) After intake, air is compressed in the heating chamber and heated through 720 degrees of crankshaft angle, 360 degrees of which in closed chamber (external combustion).

3) The transfer of heat from the very thin walls of the combustion chamber to the air heating chambers lowers the temperature and pressure of the gases on expansion and exhaust (internal combustion).

4) Better combustion and expansion of gases that take place over 540 degrees of crankshaft rotation, 360° of which is in closed combustion chamber, and 180° for expansion.

5) The glowing combustion chamber allows the optimal burning of any fuel and calcinate the residues.

6) Distribution of the work: two expansions (power strokes) over six strokes, or a third more than the in a four-stroke engine.

7) Better filling of the cylinder on the intake due to the lower temperature of the cylinder walls and the piston

8) Elimination of the exhaust gases crossing with fresh air on intake. In the six stroke-engines, intake takesplace on the first stroke and exhaust on the fourth stroke.

9) Large reduction in cooling power. The water pumpand fan outputs are reduced. Possibility to suppress the water cooler.

10) Less inertia due to the lightness of the moving parts.

## 6. ADVANTAGES OF SIX STROKE OVERFOUR STROKE ENGINES

Main advantages of the six-stroke engine

1) Reduction in fuel consumption by at least 40%:

An operating efficiency of approximately 50%, hence the large reduction in specific consumption. The Operating efficiency of current petrol engine is of the order of 30%. The specific power of the six-stroke engine will not be less than that of a four-stroke petrol engine, the increase in thermal efficiency compensating for the issue due to the two additional strokes.

2) Two expansions (work) in six strokes:

Since the work cycles occur on two strokes (3600 out of 10800) or 8% more than in a fourstroke engine (1800 out of 720), the torque is much more even. This lead to very smooth operation at low speedwithout any significant effects on consumption and the emission of pollutants, the combustion not being affected by the engine speed. These advantages are very important in improving the performance of car in town traffic.

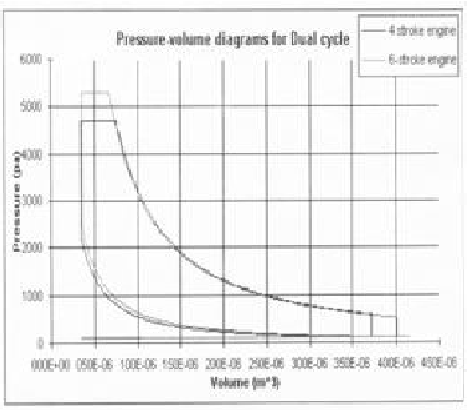


Comparisonof P-V diagramof 4-strole and 6-stroke

3) Dramatic reduction in pollution:

Chemical, noise and thermal pollution are reduced, on the one hand, in proportion to the reduction in specific consumption, and on the other, through the engine's own characteristics which will help to considerably lower HC, CO and NOx emissions. Furthermore, its ability to run with fuels of vegetable origin and weakly pollutant gases under optimum conditions, gives it qualities which will allow it to match up to the strictest standards.

4) Multifuel:

Multifuel par excellence, it can use the most varied fuels, of any origin (fossil or vegetable), from diesel toL.P.G. or animal grease. There occurs no problem in combustion due inflammability difference in six stroke engine. It's light, standard petrol engine construction, and the low compression ration of the combustion chamber; do not exclude the use of diesel fuel. Methanol-petrol mixture is also recommended.

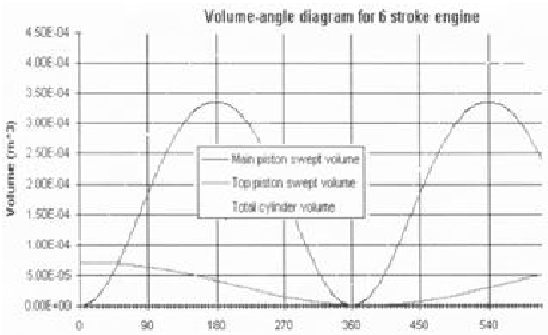


Volume-angle diagram for six stroke engine.

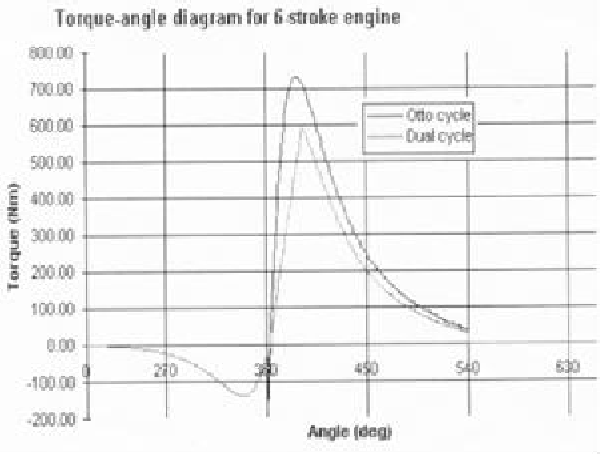


## 8.CONCLUSION

Today the world is facing energy crisis. The fossil fuel supplies are decreasing day by day and taking into consideration the need and use of automobiles, their various applications in numerous fields, the internal combustion engine has probably no alternative. With the use of six stroke engine, the efficiency obtained is more as it gives an additional power stroke per cycle. Also, it reduces cooling demands, 35% increase in torque, 40% reduced fuel consumption and also reduced pollution level.

This advancement in technology gives number of advantages and the paper will help to understand this technology in better and simpler manner.

## REFERENCE

[1] Velozeta six stroke engine –prashant pande (E-ISSN:2321-9637)

[2] A review on six stroke I.C. Engine by Dheeraj Makheeja. (IOSR-JMCE Journal)

[3] Report on sae supra –internal combustion engine.

[4] www.wikipedia.com*Technology* 11.12 (2000): 1828.

**M 105**

# Lassi filling Machine

Sumedh Kokane, Ashish Gajbar, Avinash Gaikwad, Mandar Aaglave, Ass. Prof. A. V. Sutar.
Mechanical engineering department,
D. K. T. E.'s Textile and Engineering Institute, Ichalkaranji.
sumedhskokane@gmail.com

**Abstract – This paper briefly describes us about the liquid filling machine for filling of liquid in minimum possible time using gear pump. With rapidly advancing technology and scientific developments more and more machinery inventions are now taking place in food industries enabling faster and better process with less efforts through technological improvements. Different machines are available today in market but having high prices so machines having less costs should be developed so that it will be very much affordable to small scale industries. We have made the machine of Lassi filling which fills Lassi of 200 ml in 2 sec using gear pump with high velocity and pressure.**

***Keywords –*** *Liquid, filling, gear pump, food industries, cost, affordable, technological.*

## I. INTRODUCTION

With rapidly advancing technology and scientific development more and more machinery inventions are taking place in the food industries enabling faster and better with lesser efforts through technological improvements. Different filling machines are there for big industries so we have made very affordable machine for small scale industries. According to use of this machine, the consumer can get following advantages.

- Saving the labors cost.
- Systematically produce packages.
- Accurate amount of liquid filling.
- Saving time.

In our machine we have used the gear pump for delivering Lassi with high velocity and discharge for filling of Lassi in minimum possible time. Lassi filling time is 200 ml in 2 sec. We have used the motor of 50 watt to drive the gear pump of 8.33 LPM. According to our requirement 6 LPM is needed to fill 200 ml in 2 sec. For controlling f gear pump we have controlled the rpm of motor by using VFD(Variable Frequency Drive) circuit connected to the motor. According to the program it will give command to the motor and motor will rotate particular rotations by sensing the digital signal and required amount of Lassi gets discharged through gear pump in the glass/packets.

## II. PROCEDURE OF THE SYSTEM

The schematic block diagram of the system procedure is shown in Fig.1. In this system mainly consists of Hopper, Gear pump, Single phase AC motor, Microcontroller, VFD circuit.

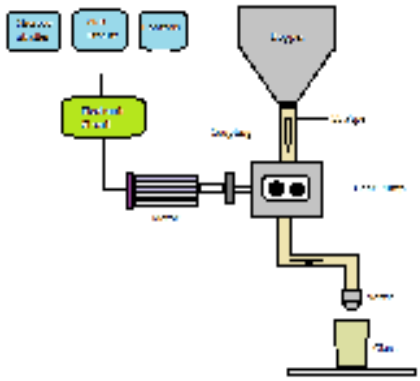

**Fig.1. Block diagram of the system**

## III. HARDWARE COMPONENT OF THE SYSTEM

### A. GEAR PUMP

Gear pumps are widely used in modern systems in food industries due to their high performance, long service life and low purchasing price and maintenance cost. It is having low noise level and high operating

pressures. We have used gear pump to pass Lassi with pressure and velocity for fast filling.

Our aim is to deliver Lassi of 200 ml in 2 sec. So, in 1 sec we require 100 ml/sec of discharge.

**a) Capacity of gear pump**

Minimum requirement of discharge through gear pump is 100 ml/sec.

It is found to be requirement of 6 LPM pump. So we have selected the pump of 8.33 LPM. Its discharge can be controlled i.e. it can be operated for 6 LPM.

For 6 LPM and at 1440 rpm,

$$LPM = \frac{cm^3/rev \times rpm_{motor}}{1000}$$

$$6 = \frac{cm^3/rev \times 1440}{1000}$$

Required $cm^3$/rev = 4.16 ml

Available pump = 8.33 LPM

$$Cm^3/rev = \frac{LPM \times 1000}{rpm}$$

$$= \frac{8.33 \times 1000}{1440}$$

Actual $cm^3$/rev = 5.78 ml

Pump delivers 5.78 ml/rev at 1440 rpm.
For 200 ml = 200/5.78 = 34.60 rev needed.

$\frac{1440}{60}$ = 24 rps.

So,

Cycle time = $\frac{34.60}{24}$ sec

Cycle time = 1.44 seconds.

For 200 ml calculating number of revolutions i.e. $\frac{200}{5.78}$ = 34.60 revolutions required for 200 ml of filling.

**b) Pressure on gear pump**

P = hρg

Where,

h = Total head loss of system (m)
ρ = Density of Lassi (kg/$m^3$)
g = Gravitational constant (m/$sec^2$)
P = 0.5974×1103×9.81
= 6464.12 N/$cm^2$
**P = 65.91 g/$cm^3$.**

From above calculations we have selected the stainless steel external gear pump of 8.33 LPM.

**Details of Gear pump –**

- Pump model – HGSX 025 (ROTODEL)
- Port size – 1/4" × 1/4"
- Capacity at 1440 RPM – 8.33 LPM
- Weight of pump – 2 KG
- Power required –
  No load viscous HP – 200 CST = 0.20
  No load viscous HP – 500 CST = 0.25

**B. MOTOR**

Motor is used to drive the gear pump. Coupling transmits the required torque to drive gear pump with Lassi.

**a) Power requirement**

$$P = \frac{Qh\rho g}{\text{pump efficiency}}$$

(Pump efficiency) $_{max}$ = 50 %

Where, Q = Discharge of gear pump

8.33 LPM = 0.0001388 $m^3$/sec

$$P = \frac{0.0001388 \times 0.5974 \times 9.81 \times 1103}{0.5}$$

**P = 1.79 watt**

While calculating torque required we have to consider the torques required to drive gear pump, for Lassi and coupling.

Calculating the torques required to drive the various components,

For Motor,

$$P = \frac{2\pi NT}{60000}$$

$$T = \frac{60000 \times 0.00179}{2\pi \times 1440}$$

T = 0.0119 N-m.

Thus total torque needed to drive all the components = 0.0119 N-m

From above calculations we have selected the motor of details mentioned below.

**Specifications of Motor –**

- H.P. – 1/16
- RPM – 1440
- Torque – 0.0119 N-m

## C. HOPPER

For the storage of Lassi we have designed the hopper of 65 liters as given in fig.3.

For food industries the material should be hygienic so we have taken material Stainless Steel (316).

### a) Stresses in hopper

#### 1. Stresses in cylindrical portion

$$\text{Stress}_{\text{Hopper}} = \frac{\text{Load on cylinder}}{\text{Surface area of cylinder}}$$

$$= \frac{516.20}{422918.06}$$

$$\text{Stress}_{\text{Hopper}} = 1220.056 \text{ N/m}^2$$

#### 2. Stress on frustum

$$\text{Stress}_{\text{Frustum}} = \frac{\text{Load on frustum}}{\text{Surface area of frustum}}$$

$$= \frac{188.35}{275574.41}$$

$$\text{Stress}_{\text{Frustum}} = 682.213 \text{ N/m}^2$$

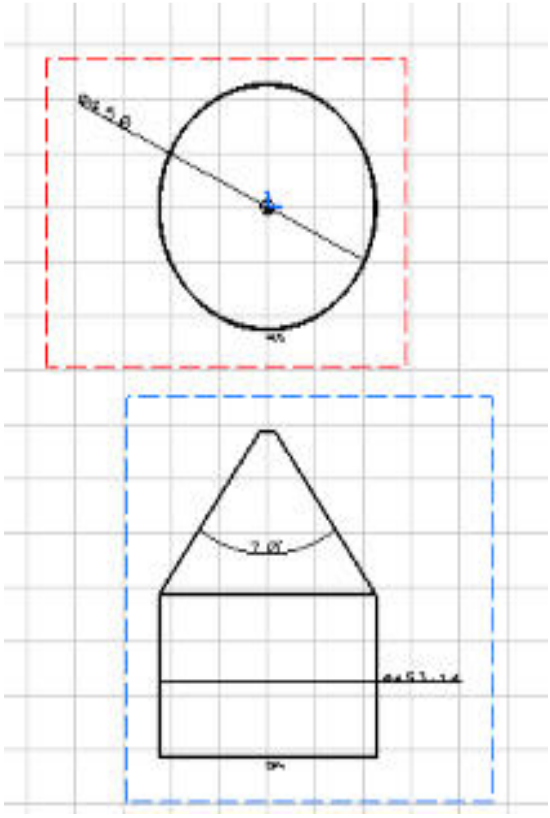

**Fig.2. Drafting of hopper**

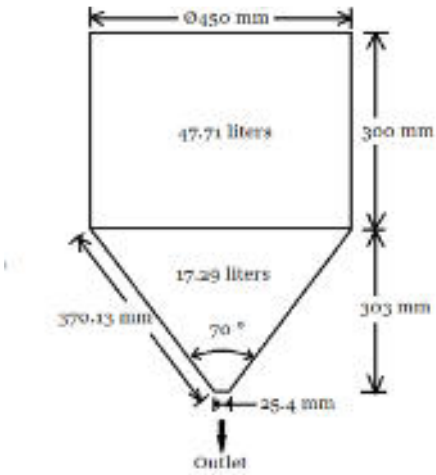


**Fig.3. Hopper design**

$$\text{Volume}_{\text{Hopper}} = \text{Volume}_{\text{Cylinder}} + \text{Volume}_{\text{Frustum}}$$

**Volume $_{\text{Hopper}}$ = 65 Liters**

**Weight $_{\text{Hopper}}$ = 8.08 Kg**

**Stress $_{\text{Cylinder}}$ = 1220.056 N/mm$^2$**

**Stress $_{Frustum}$ = 682.213 N/mm$^2$**

## D. MICROCONTROLLER

Microcontroller is a computer on a chip that is programmed to perform almost any control, sequencing, monitoring and display the function. Because of its relatively low cost, it becomes the natural choice to the designer.

Its main advantage is no other external components are needed for its application because all necessary peripherals are already built into it. Thus, we can save the time, space and cost. And it is having long life. From above features we have selected AT89S52 CMOS 8-bit microcontroller.

**Microcontroller Details =**

- Type – AT89S52 CMOS 8-bit microcontroller
- Features – Low power, High performance, 8k bytes of in system programmable flash memory.
- 256 bytes of RAM.
- Three 16 bits times/counters.
- 32 I/O lines
- A six-vector two-level interrupt architecture.

## E. Head calculations

While designing pipe required for delivering Lassi from hopper to pump and pump to container we have to consider the various losses as roughness, losses at bends, losses at fittings.

**Calculations for head and pipe**

$$H = H_S + H_D \quad \ldots (1)$$

$H_S$ = Static head = 300 mm
$H_D$ = Dynamic head

$$H_D = \frac{KV^2}{2g} = 0.2974 \text{ mm}$$

$$K_{Total} = K_{Fittings} + K_{Pipes} \quad \ldots (2)$$

| Surface | Absolute Roughness Coefficient (k) | |
|---|---|---|
| | ($10^{-3}$ m) | (feet) |
| Copper, Brass, Aluminum (new) | 0.001-0.002 | $(3.28\text{-}6.56)\times 10^{-5}$ |
| PVC and Plastic pipes | 0.0015-0.007 | $(0.49\text{-}2.30)\times 10^{-5}$ |
| Stainless steel | 0.0015 | $0.49\times 10^{-4}$ |
| Steel Commercial pipe | 0.045-0.09 | $(1.48\text{-}2.95)\times 10^{-5}$ |
| Stretched steel | 0.015 | 4.95 |
| Weld steel | 0.045 | $1.48\times 10^{-4}$ |
| Galvanized steel | 0.15 | $4.92\times 10^{-4}$ |
| Rusted steel (corrosion) | 0.15-4 | $(4.92\text{-}131)\times 10^{-4}$ |
| New cast iron | 0.25-0.8 | $(8.2\text{-}26.2)\times 10^{-4}$ |
| Worn cast iron | 0.8-1.5 | $(2.62\text{-}4.92)\times 10^{-3}$ |
| Rusty cast iron | 1.5-2.5 | $(4.92\text{-}8.2)\times 10^{-3}$ |
| Sheet or Asphalted cast iron | 0.01-0.015 | $(3.28\text{-}4.92)\times 10^{-5}$ |
| Smoothed cement | 0.3 | $0.98\times 10^{-3}$ |
| Ordinary concrete | 0.3-1 | $(0.98\text{-}3.28)\times 10^{-3}$ |
| Coarse concrete | 0.3-0.5 | $(0.98\text{-}16.4)\times 10^{-3}$ |
| Well planned wood | 0.18-0.9 | $(5.9\text{-}29.5)\times 10^{-4}$ |
| Ordinary wood | 5 | $16.4\times 10^{-3}$ |

**Table No. 1**

| Fitting items | No. of Items | $K_{fittings}$ | Item Total |
|---|---|---|---|
| Pipe Entrance (Bellmouth) | 1 | 0.05 | 0.05 |
| 90° Bend (short radius) | 10 | 0.75 | 7.5 |
| 45° Bend (Short radius) | 2 | 0.3 | 0.6 |
| Butterfly valve(Fully Open) | 2 | 0.3 | 0.6 |
| Non Return Valve | 1 | 1 | 1 |
| Bellmouth outlet | 1 | 0.2 | 0.2 |
| **Total $K_{fittings}$** | | | **9.95** |

**Table No. 2**

From Table No. 2,
At Entrance = 0.05
90° bend = 7.5
45° bend = 0.6

Total $K_{Fittings}$ = 16.25

And $K_{Pipes} = \frac{fL}{D} \ldots (3)$

$$f = \frac{0.25}{[\log\{\frac{k}{3.7\times D}+\frac{5.74}{Re^{0.9}}\}]^2} \quad \ldots (4)$$

k = Roughness value
Re = Reynolds's number
$K_{Steel\ pipe} = 0.0085$

Reynolds number for Lassi,

$$Re = \frac{\rho VD}{\mu}$$

Where,
P =Density of Lassi
V = Velocity
D = Diameter of pipe

$$Re = \frac{1103\times 0.565\times 25.4\times 10^{-3}}{400\times 10^{3}}$$

Re = 38.17

From (4),

$$f = \frac{0.25}{[\log\{\frac{0.01\times 10^{-3}}{3.7\times 2.54\times 10^{-2}}+\frac{5.74}{38.17^{0.9}}\}]^2}$$

f = 0.5164

From (3)

$$K_{Pipe} = \frac{fL}{D}$$

$$= \frac{0.5164\times 0.1}{0.0254}$$

$K_{Pipe} = 2.0331$

From (2),

**$K_{Total}$ = 18.283**

**$H_{Total}$ = 0.5974** …from (1)

**Power requirements**

$$Power = \frac{Q\rho Hg}{\eta}$$

η = Pump efficiency = 0.5
Q = 8.33 LPM = 0.4998 $m^3$/hr
= 0.0001388 $m^3$/sec.

Pumping power = 1.79 watt

**Power = $2.44\times 10^{-3}$HP** … (As 0.25 HP = 186.42 watt)

## IV. Assembly of machine

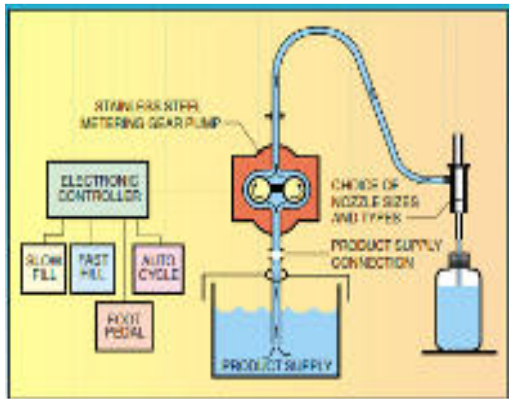


**Fig.4. Product Flow Diagram**

## V. REFERNCES

[1] "An automated microcontroller based liquid mixing system". By Dr. A. S. C. S. Sastry. Published in IEEE multi topic conference, 2002.
[2] **"**Automatic liquid filling to bottles of different height using programmable logic controller". Mallaradhya H. M., K. R. Prakash Aece-iraj international conference, July 2013.
[3] "Automatic liquid filling machine". Nisarg .A. Solanki vol. 4 issue 05, May-2015.
[4] Automatic liquid mixing and filling- A review, Mr. Akshay. S. Kulkarni, volume-04, issue-01, January-2016.
[5] "Fluid Mechanics" By R. K. Bansal, Publisher, Firewall Media, 205. ISBN, 8131802949, 9788131802946.

**M106**

# Effect of Nanoparticles on Performance, Combustion and Emission Characteristics of CI Engine fueled with Poultry Litter Biodiesel Blend at Optimal Injection Pressure

Shailesh M Golabhanvi
AssistantProfessor, Department of Mechanical engineering, Alvas Institute of engineering and Technology, Moodbidri, Karnataka, India.

Balakrishna Khot
AssistantProfessor, Department of Mechanical Engineering, DKTE Socitey's Textile and Engineering Institute, Ichalakaranji, Maharashtra, India.

**Abstract : At present virtually all automotive andtransportation vehicles are powered by internal combustion engines, which use hydrocarbons as fuels. Sustainability is a key principle in natural resource management, and it involves operational efficiency, minimization of environmental impact and socio-economic considerations. With the recent development of waste management strategy viz; waste recycle, re-use and waste reduction etc., chicken feather has been put to various uses such as in the production of animal feed, organic fertilizer, biodegradable plastic and others. It has been mentioned in some text/resource that chicken feather can be used to mop oil spill. However, there is scarce literature on the mopping account of hydrocarbon oil by chicken feather. In this experimental study, a computerized 4-stroke, single cylinder, constant speed, direct injection diesel engine was operated on poultry litter oil biodiesel of B20 blend with various nano particles additions at optimal injection pressure. Various engine performance, combustion and emission parameters such as brake thermal efficiency, heat release rate, cylinder pressure, etc. were recorded from the acquired data. In addition to variation of injection pressure to this biodiesel with the aim of diluting the level of pollutants in the exhaust and for the improvement of engine performance.**

**The data was recorded with the help of engine analysis software. The recorded parameters were studied for varying loads and their corresponding graphs have been plotted for comparison purposes. From the properties and engine test results, it has been established that poultry litter oil biodiesel is a better replacement for diesel without any engine modification only by varying injection pressure to 200bar from 180bar along with aluminum nanoparticles. Increase in the thermal efficiency was observed as compared with biodiesel and diesel. Chicken feather is an efficient natural sorbent that can be used to mop diesel spill on land and water, and it is efficient for diesel recovery. A team of**

**researcher has a look into the issue of producing energy and bio-oil from thissource. Feasibility studies on the characterization of poultry litter oils and Biodiesel with nano particle blends, performance and Emission studies carried out by earlier researchers with regards to the use of variation injection pressure is presented.**

***Keywords— Poultry litter oil, alternative fuels, Esterification, combustion, emission, performance, nanoparticles, PLOMEAL-Poultry Litter oil Methyl Ester Aluminum nanoparticle. TI-titanium nanoparticle.component.***

## Introduction

Over the last two decades in India, there has been a tremendous increase in number of automobiles. Currently the motor vehicle population in India is about hundred millions.The economic progress of a country will be decided by the amount of fuel consumption per capita. India is home to more than billion people, about "one sixth".

Alternative fuel is any material or substance, other than petroleum, which is consumed to provide energy to power an engine. Some examples of Alternative fuel are biodiesel, ethanol, Hydrogen, methane, natural gas, vegetable oil and animal fat. The need for the development of alternative fuel sources has been growing due to concerns that the production will no longer meet the growing demand.

The most appealing alternative fuels are those, which can be used minimum modifications of existing engines. Bio-fuels are of rapidly growing interest for reasons of energy security, diversity, and sustainability as well for greenhouse gas mitigation. In recent years, the U.S. has enforced regulations and adopted aggressive goals toof the world human population. One factor that has decelerated India's rate of economic development is the need to import of about 70% of petroleum demand which costs approximately Rs.8,79,000 corers per annum. The diesel engine has gained the name and fame by serving the society in many ways viz. transportation, Industrial and agricultural sectors. With increasing demand on the use of petroleum products, a stronger threat to clean environment is being poised as the burning of these fuels is associated with emissions like carbon dioxide (CO2), carbon monoxide (CO), oxides of nitrogen (NOx) and particulate matter, which is currently the dominant global source of emissions. These emissions are major causes of air pollution and hence the environment. The most appealing alternative fuels are those, which can be used with minimum or without modifications of existing engines [1, 3].

encourage increased usage of biofuels. While carbon trading offers an escape route from developing newer and less polluting fuels, countries all over the world including India are slowly realizing that it is inevitable to switchover to cleaner and renewable fuels and energy from the conventional fossil fuels [4].

Nano particles typically measure 1 to 100 nm in diameter. This property of the material changes as the size of the particle changes. Nanoparticles have high surface to volume ratio due to which it promotes better combustion by improved atomization. The characteristics of Nano aluminum in suspension are more conducive to the formation of micro-explosions during combustion, which assists the air-fuel mixing and leads to cleaner, more efficient combustion. The ultra-sonication technique is the best-suited method to disperse the nanoparticles in a base fluid to prevent the agglomeration of nanoparticles using pulsating frequencies to disperse nano meter ranges into the fluid [4].

.

## PREPERATION OF MATERIALS

Biodiesel Production: Biodiesel can be produced from straight vegetable oil, animal oil/fats, and tallow and waste oils. There are three basic routes to biodiesel production from oils and fats:

o Base catalyzed transesterification of the oil.

o Direct acid catalyzed transesterification of the oil.

o Conversion of the oil to its fatty acids and then to biodiesel

Almost all biodiesel is produced using base catalyzed transesterification as it is the most economical process requiring only low temperatures and pressures and mostly producing a 98% conversion yield. Hence transererification process is utilized to obtain biodiesel from Poultry litter oil.

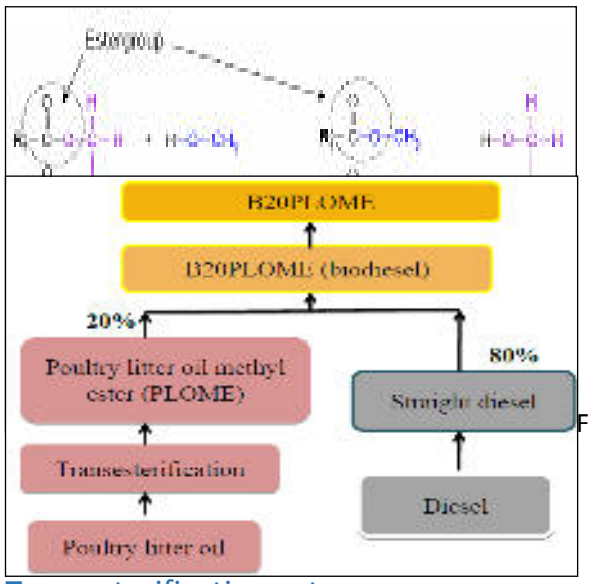


Fig. 1: Flow Chart of Preparation of Biodiesel (B20)

## Transesterification process

The concept of transesterification process of oil with alcohol (methyl or ethyl) provides a clean burning fuel (commonly known as biodiesel) having less viscosity. The poultry litter oil methyl ester can be produced bytwo step esterification process.It includes acid and base esterification processes. The Transesterification process is the reaction of a triglyceride (fat/oil) with an alcohol to form esters and glycerol. A triglyceride has a glycerin molecule as its base with three long chain fatty acids attached. The alcohol reacts with the fatty acids to form the mono-alkyl ester or biodiesel and crude glycerol. In most production process, methanol or ethanol is the alcohol used and is base catalyzed by either potassium or sodium hydroxide. Potassium hydroxide has been found to be more suitable for the ethyl ester biodiesel production; either base can be used for the methyl ester.

Transesterification Reaction:

Fig

## Transesterification setup.

For the experimental purpose a round bottom flask is used as laboratory scale reactor. A hot plate with magnetic stirrer arrangement is employed to heat the mixture present in the flask. The mixture is stirred at equal speed for all the test runs. The temperature maintained during the experiment is in the range of 65-75ºC.

### Acid Esterification

One litre of poultry litter oil needs 600 ml of methanol for the acid esterification process. The poultry litter oil is poured into the flask and then heated to about 500C. After this, methanol and 0.5% of sulphuric acid is added to the preheated poultry litter oil and stirred for a few minutes. Heating and stirring is continued for the next 20–30 minutes at the atmospheric pressure. Upon completion of this reaction, the product is poured into a separating funnel for removing the excess alcohol. The excess alcohol, with sulphuric acid and impurities comes to the top surface and is removed. The lower layer is separated for further processing (alkaline esterification).

### Alkaline Esterification

Alkaline catalyzed esterification process utilizes the experimental setup of acid catalyzed pre-treatment process. The products of first step are preheated to the desired reaction temperature of 55±5°C in the flask. Meanwhile, 30ml of oil is taken in a Round bottom flask; 0.24 gram of KOH is dissolved in the methanol and is poured into the flask. Then the mixture is heated and stirred for about 45 minutes. The reaction is stopped, and the products are permitted to separate into two layers. The lower layer, which contains impurities and glycerol, is removed. The methyl ester remains in the upper layer, which is washed to remove theentrained impurities and glycerol. Hot distilled water (10% by volume) is sprayed over the surface of the ester and stirred gently. Lower layer is thrown out and yellow colour layer (known as biodiesel) is separated.

2.4.4 Fuel Blend Preparation

In order to evaluate the various physical, chemical and thermal properties algae and fish biodiesel; such as viscosity, density, specific gravity, flash point, cetane number and calorific value, several tests are conducted as per ASTM standards. ASTM standard for 100% biodiesel (ASTM D6751) and biodiesel B20 (ASTM D7467) B20PLOME is prepared by mixing 20% by volume of biodiesel with 80% of diesel with 30mg/lt alumina nanoparticles in a beaker.

| Properties | Units | Diesel | Poultry Litter oil Biodiesel |
|---|---|---|---|
| Colour | - | Orange | Pale Yellow |
| Density | kg/m3 | 850 | 737 |
| Kinematic Viscosity | cst at 40 °C, | 2.0 | 5.48 |
| Calorific Value | kJ/kg | 42000 | 29000 |
| Fire Point | °C | 56 | 178 |
| Flash Point | °C | 50 | 154 |
| Cetane Index | - | 55 | 61 |

Table 1: Properties of Fuel

## Experimental PROCEDURE

All the experiments were conducted at the designed injection timing of 27ºbTDC, speed 1100 rpm and 17.5 Compression ratios. The experiments were conducted at no-load, 25%, 50%, 75 % and 100% of full load condition with neat diesel operation. Data such as fuel flow, air flow, exhaust temperature, exhaust smoke opacity, NOx, CO, and UBHC emissions were recorded for each set of trial. Initially the experiments were conducted at the design injector opening pressure timing. Similar experiments were conducted at 200 and 220 bar injector opening pressures (IP).

Performance and emission tests are piloted on various biodiesel blends in order to optimize the blend concentration. To accomplish this, several blends of changing concentrations are prepared. The blends are in the proportion of B10 (10% biodiesel and 90% Diesel by volume), B20, B30, and B40. These blends are then subjected to performance and emission tests on the engine. Then, the power output, brake thermal efficiency, brake specific fuel consumption, smoke density, CO, HC and NOx emissions of biodiesel are analyzed. Maximum thermal efficiency and minimum specific fuel consumption are observed for B20 blend. Hence the further experiments are limited to B20 blend only.

Optimization of Injection Pressure

Experiments are conducted at three different injection pressures viz., 180bar, 200bar, 220bar for studying the effect of injection pressure on the engine performance and emission using poultry litter methyl ester oils. Poultry litter biodiesel is blended with diesel oil at 20% by volume. The results of these are diesel has got good performance characters at 180 bar. 20%PLOME shows good results at 200 bar.Nano particles are added to this optimal pressure oil to conduct experiments i.e. 200barB20PLOME.

Nano Particles Addition

Nano particles are mixed with B20PLOME, to get PLOMEAL and PLOMETI at the rate of 30mg/l, is added to get required concentration. After addition of Nano particles to the biodiesel, it is mixed gently by magnetic stirrer. Experiments are carried out with optimum biodiesel blend at optimized injection pressure. The engine is run initially at the rated injection timing of 27º bTDC for B20PLOMEAL at 200bar and Diesel fuel. Similarly experiments are conducted at 200 bar PLOMETI.

Uncertainty Analysis

The uncertainties of the parameters are calculated by sequential perturbation. Some of average uncertainties of measured and calculated parameters are air flow rate (1.1%), liquid fuel flow rate(0.1%), gas flow rate(2%), engine load(0.1%), engine speed(1.3%), cylinder pressure(0.8%), temperature(1.0%), LCV of liquid fuel (1.0%). Based on these, the calculated accuracy of the performance and combustion studies of the engine is found to be within ±4.6%. However, the accuracy of emission study is found to be ±4.6%. The maximum values of coefficient of variance of the performance parameters, viz., BTE and BSFC are 3 and 4% respectively. Whereas, the combustion emission parameters namely, Peak Cylinder Pressure, Ignition Delay, CO, HC and NOx have shown COVs of 5,4, 2, 2 and 6% respectively.

## RESULTS AND DISCUSSIONS

### A)Performance analysis

Brake thermal efficiency

The variation of BTE with brake power at different fuel additives for B20PLOME at optimum injection pressure of 200bar is shown in Fig. 3 It can be seen from the figure that the BTE has increased with increase in brake power for all fuels. This is due to reduction in heat loss and increase in power. It can be seen that at full load operation the BTE of B20PLOMEAL is 21.32% and for PLOMETI is 20.6%and that is nearest to Diesel fuel 20.4%.B20 blend shows better BTE than diesel, due to effective combustion by making use of the rich oxygen content within the ester (PLOME).B20PLOME30AL showed maximum increase in BTE with respect to diesel. Due to its high surface area to volume ratio of nano particle, resulting in fine atomization and rapid evaporation of fuel, promoting improved brake thermal efficiency.

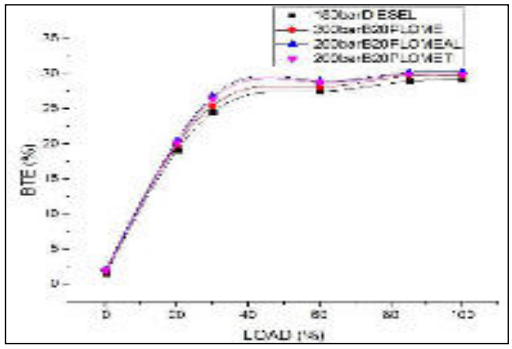


Fig. 3: Variation of BTE with Load

Brake Specific Fuel Consumption

Fig.4 shows the variation of brake specific fuel consumptions (BSFC) with load for diesel and B20 with nanoparticle. The BSFC decreases with increase in load for all fuels at all loads. The specific fuel consumption is higher for the 20% biodiesel blend than neat diesel at all loads. This is due to the lower calorific value of the biodiesel blend. The lowest BSFC is obtained as 0.4526kg/kW-hr and 0. 464 kg/kW-hr for 30mg/l AL2O3and Ti02 nano particle added with B20 respectively whereas it is 0.552kg/kW-hr for B20 at full load. This may be due to the result of nano particles addition to the biodiesel, which promotes the combustion process.

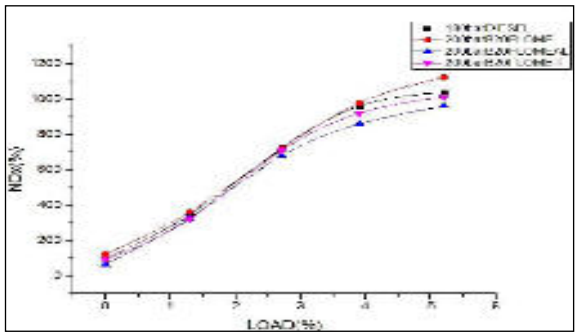

Fig. 4:Variation of BSFC with Load

## B)Emission characteristics

Unburnt Hydrocarbon (UBHC)

Fig.5 shows variation of UBHC emission with load at different nanoparticles added for B20PLOME fuels. UBHC are the result of incomplete combustion of fuel. It is seen that diesel has the highest UBHC emission at all loads indicating that the heavier hydrocarbon particles present in Diesel fuel.. UBHC emissions for all blends are lower than the diesel; Presence of oxygen in the biodiesel promotes more complete combustion that leads to lowering the hydrocarbon emissions. Drastic decrease in UBHC emissions when alumina nano particles were added to B20PLOMEAL.The catalytic behavior alumina nano particle, improves ignition characteristics of alumina nano particles and the shortening of the ignition delay. UBHC emission is more in PLOMETI than PLOMEAL;this is due to more oxygen in alumina than titanums.

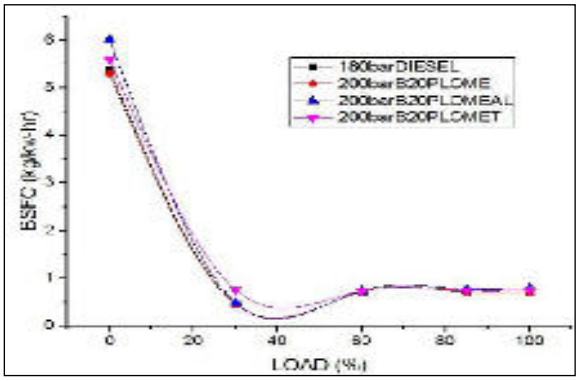


Fig. 5: Variation of UBHC with Load

Oxides of Nitrogen (NOx)

The variation of NOxemission with brake power for B20PLOME andnano particles is shown in Fig. 6 It can be observed that the NOxemissions have increased with increase in load at all injection pressures for B20PLOME fuel. The formation of NOxis highly dependent on in-cylinder temperature, oxygen concentration in the cylinder and on engine technology. In general, the NOxconcentration varies linearly with the load of the engine. As the load increases, the overall fuel-air ratio increases resulting in anincrease in the average gas temperature in the combustion chamber and thus higher NOx[3].

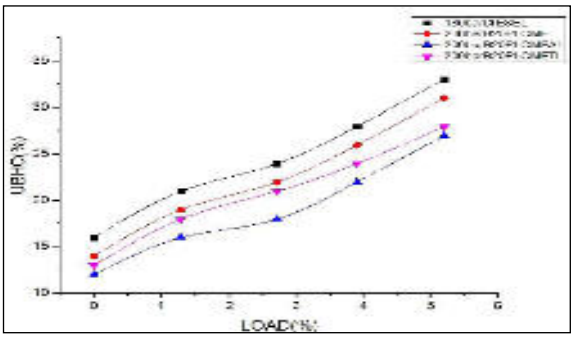


Fig. 6:Variation of NOx with Load

Carbon Monoxide (CO)

From the Fig. 7 the engine emits more CO using Diesel as compared to that of transesterified oils under all loading conditions. Carbon monoxide is a toxic combustion product resulting due to incomplete combustion of hydrocarbons [3]. In the presence of sufficient oxygen, CO is converted in CO2. Biodiesel is an oxygenated fuel and that it contains 11% of oxygen which helps in more complete combustion hence CO emissions are reduced. Also it is seen that CO is lower at part loads and shows an increasing trend with load and is maximum at full load condition for all fuels. This is common in IC engines since air-fuel ratio decreases with increase in load. The CO emission increases as fuel-air ratio becomes greater than stochiometric value [3].

CO emissions for B20PLOME is lower than the diesel fuel The presence of oxygen content in methyl esters leads to more complete combustion. CO emission for B20PLOME30AL is lower than the other two fuels i.e PLOME and PLOMETI. Catalytic behavior of nano particles improved ignition characteristics of alumina nanoparticles and the shortening of the ignition delay. Alumina nano particles has more oxygen quantity than titanium oxide, this causes more CO formation in PLOMETI than PLOMEAL.

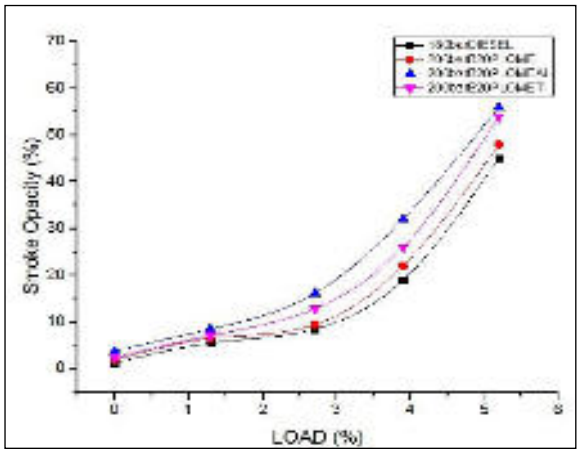


Fig. 7: Variation of CO with Load

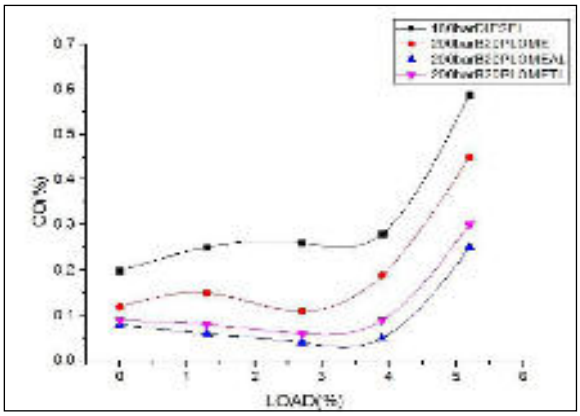


Fig. 8:Variation of Smoke Opacity with Load

## C) Smoke capacity

The variation of smoke opacity with load at 200 bar optimal pressure for B20PLOME, PLOMEAL and PLOMETI are depicted in Fig.8. As it can be seen from the figure, for all the fuels tested the smoke opacity increased with increase in load. The high smoke emission is a suggestive of an incomplete combustion and the amount of smoke present in the exhaust gas is measured to quantify the particulate matter present in the exhaust gas. The smoke opacity of the Diesel engine exhaust is said to be a visible indicator of the combustion process [3]. Compared to other harmful and invisible emissions, smoke is more irritating and could cause nuisance.

B20PLOME30AL has slightly higher smoke opacity than the other two, Molecules of B20PLOME30AL being hea ission tha

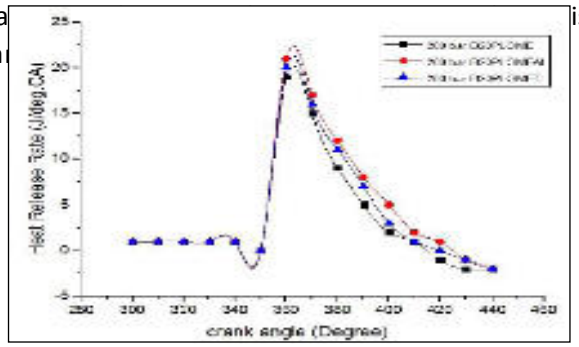


Fig 9: Variation of HRR with Crank Angle

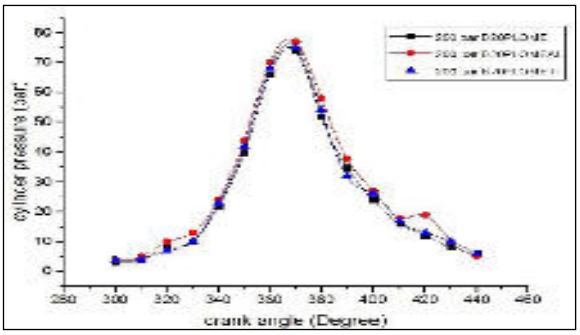


Fig 10: Variation of Cylinder Pressure with Crank Angle

## D) Combustion characteristics

Heat Release Rate (HRR)

The heat release rate is the most valuable source of information for the combustion mechanism in diesel engines. From the literature it is noticed that biodiesel have high viscosity and poor volatility which causes the slow vaporization and hence there is an increase in physical delay [4]. injection parameters have more significant effect on engine performance with biodiesel as fuel. Increase of injection pressure and advance of injection timing leads to proper atomization and optimum delay period. Pre-combustion mixing is a process of fuel-air mixture preparation that occurs before the onset of ignition in typical direct-injection diesel engines.

The comparison of heat release rate for B20PLOME, Diesel fuel operation at full load is shown in Fig 9 Heat release diagram is a quantitative description of timelyburning of fuel in engine. Because of vaporization of the fuel during ignition delay, a negative heat release rate is observed at the beginning and after the combustion is initiated it becomes positive [2]. In general, during ignition delay, the fuel droplets spread over a wide area around fresh air to form the fuel-air mixture. Once the ignition delay is over, the premixed fuel-air mixture burns, releasing heat at a very rapid rate. It is observed that B20PLOMEwith 200 bar injection pressure showed greater HRR.

P- Θ Curve

Fig. 10 shows the variation of cylinder pressure with crank angle for B20PLOME fuel at different injection pressures. It is seen that B20PLOME fuelwith 200 bar injection pressure had almost the same peak pressure and synchronize with that of Diesel, which is operated at 180bar and 27ºbTDC.This is again because of slight delay in ignition delay thereby compensating the peak pressure almost at par with the Diesel. But when the injection pressure is increased to 200bar there is a rise in peak pressure compared to diesel for B20PLOME, this is due to higher heat release at this combination of injection pressure. When the engine is operated at injection pressure of 220bar again there is a decrease in peak pressure due to lower heat release rates which also decrease the thermal efficiency. As it is evident from the p-θcurve the peak pressure is largelyinfluenced by the delay period[3].

## CONCLUSION

Tests were conducted for various nanoparticles at 200 bar optimal injection pressure. The optimum values of performance, emission and combustion are obtained B20PLOMEAL.Poultry litter oil blended biodieselfueled with aluminaand titanium oxidenano particles determined to be suitable replacement to straight diesel.B20 poultry litter oil biodiesel showed increase in BTE than diesel at full load, and nanoparticlesadded B20PLOME showed maximum increase in BTE compared with diesel and B20PLOME at full load.For B20PLOME the emission of HC, CO and Particulate Matter decreases with a slight increase in NOxand , Smoke opacity as compared to diesel, andnano particle added biodiesel showed again reduced in emissions compared with diesel and B20PLOME.The higher emission of NOxis controlled by the use of alumina nano particles blended with biodiesel. HRR and Cylinder pressure were observed maximum for nanoparticle added biodiesel.

References

[1] [1] D. K. Ramesha "Study on effect of Alumina nanoparticles as additive with poultry litter biodiesel on performance, combustion and emission characteristics of diesel engine", Materials today proceedings, ELSEVIER publication.

[2] [2]D K Ramesha, "An experimental study on usage of plastic oil and B20 algae biodiesel blend as substitute fuel to diesel engine",EnvironSciPollutRes DOI 10.1007/s11356-015-5981-6

[3] [3]Mrityunjayaswamy K M, Ramesha D K, " A Study on the Effect of Injection Pressure and Injection Timing on the Engine Performance and Emissions with Blends of FOME as a Fuel for CI Engine", Int. Journal of Engineering Research and Applications,Volume.3, Issue 6, Nov-Dec 2013, pp.777-782.

[4] [4]Prsbhu L "Investigation on Performance and Emission Analysis ofTio2 Nano-particle As an additive For Bio-Diesel Blends", Journal of Chemical and Pharmaceutical Sciences, ISSN: 0974-2115.

[5] [5] Arulmozhiselvan, V., Anand, R. B., Udayakumar, M., (2009). Effects of cerium oxide nanoparticle addition in diesel and diesel-

biodiesel-ethanol blends on the performance and emission characteristics of a CI engine, ARPN Journal of Engineering and Applied Sciences, Vol. 4(7), pp.01-06.

[6] [6] Banapurmath.N.R and P.G.Tewari, (2008). "Performance of a low heat rejection engine fuelled with low volatileHonge oil and its methyl ester" Proc.IMechE Vol.222, Part A. Journal of power and energy, 323-330.

[7] Brammer, J.G., M.Lauer, A.V.Bridgwater, Opportunities for biomass-derived 'bio oil'inEuropeanheatandpowermarkets,EnergyPolicy, Volume34,Issue17,November2006,Pages2871-2880.

[8] Bridgwater, A.V. D.Meier,D.Radlein, an overviewoffaspyrolysisofbiomass,OrganicGeochemistry, Volume30,Issue12, December1999, Pages1479-1493.

[9] [9]Demirbas,A.,Effectsoftemperatureandparticlesizeon bio char yield frompyrolysisofagriculturalresidues,JournalofAnalyticalandAppliedPyrolysis, Volume 72, Issue2,November2004, Pages243-248 T84322-4105, USA.

[10] Diebold,J.P.,Mailne,T.,Czernik,S.,Oasmaa,Bridgwater,Cuevas,Gust,Huffman,Piskorz.ProposedSpecificationsforVariousGradesofPyrolysis Oils FastPyrolysisof Biomass: A Handbook.1999.

[11] Dreisbach,R.R.,"PhysicalPropertiesofChemicalCompounds,"Vol-I AmericanChemicalSociety,Washington,1955.

[12] McDonald,J.R.,andDean,A.H.ElectrostaticPrecipitatorManual.NewJersey:NoyesDataCorporation, 1982.

[13] McHenry,M.P.Agriculturalbio-charproduction,renewableenergygenerationandfarmcarbonsequestrationinWesternAustralia:Certainty,uncertaintyandrisk Agriculture,Ecosystems&Environment,Volume129,Issues1-3,January2009, Pages1-7.

[14] McKinley, B. Broome,M.Oldham,L."PoultryNutrientManagement".20Sep.2002.MississippiStateUniversity12Dec.2008.

[15] [16]Milne,E.,D.S.PowlsonandC.E.Cerri,Soilcarbonstocksatregionalscales(preface),Agric. Ecosystem.Environ.122 (2007) pp.1–2

[16] [17]Nichols,G.B.1970aManualofElectrostaticPrecipitatorTechnologyPart1-Fundamentals.Birmingham,Alabama:SouthernResearchInstitute.TechnicalReportNo APTD-0610.

[17] Porle KandParker,K.R.ThePhysAndChem.PropertiesofParticlesandTheirEffect on Performance AppliedElectrostaticPrecipitation.Ed.K.R.Parker. London,BlackieAcademicandProfessional, 1997 152-168.

[18] SrinivasaRaoP and GopalakrishnanK.V"Use of non-edible Vegetable oils as alternative fuels in Diesel Engines", DNES project report no. 7/2/83, pp 292-297, Indian Institute of Technology, Chennai, 1992

[19] [20]Senthil Kumar, Ramesh A&NagalingamB "Experimental investigation on a Jatropha oil-Methanol dual fuel engine" pp. 1-7, SAE 2001-01-0153, 2001

[20] [21] Suryawanshi.J.G&Bhoyar.A.B "Experimental investigation on IC engine using Biodiesel" pp. 189-196, XVII NCICEC, 2001

[21] G. Eason, B. Noble, and I.N. Sneddon, "On certain integrals of Lipschitz-Hankel type involving products of Bessel functions," Phil. Trans. Roy. Soc. London, vol. A247, pp. 529-551, April 1955. (*references*)

[22] J. Clerk Maxwell, A Treatise on Electricity and Magnetism, 3rd ed., vol. 2. Oxford: Clarendon, 1892, pp.68-73.

[23] I.S. Jacobs and C.P. Bean, "Fine particles, thin films and exchange anisotropy," in Magnetism, vol. III, G.T. Rado and H. Suhl, Eds. New York: Academic, 1963, pp. 271-350.

[24] K. Elissa, "Title of paper if known," unpublished.

[25] R. Nicole, "Title of paper with only first word capitalized," J. Name Stand. Abbrev., in press.

[26] Y. Yorozu, M. Hirano, K. Oka, and Y. Tagawa, "Electron spectroscopy studies on magneto-optical media and plastic substrate interface," IEEE Transl. J. Magn. Japan, vol. 2, pp. 740-741, August 1987 [Digests 9th Annual Conf. Magnetics Japan, p. 301, 1982].

[27] M. Young, The Technical Writer's Handbook. Mill Valley, CA: University Science, 1989

**M 108**

# Design & Fabrication of Material Handling Equipment without External Power

Ajay V. Khedkar 1, Rushikesh S. Maindargi 2, Amey A. Panade 3, Pratik A. Jadhav 4 , Rajkumar D. Patil5
1 U. G. Student, Mechanical Engineering Department, DKTE's TEI, Ichalkaranji, Maharashtra.
2 U. G. Student, Mechanical Engineering Department, SGI, Atigre, Maharashtra.
3, 4 U. G. Student, Mechanical Engineering Department, SITCOE, Yadrav, Maharashtra.
5Assistant professor, Mechanical Engineering Department, DKTE's TEI, Ichalkaranji, Maharashtra.

**Abstract : The notable importance of material handling system is that it improves productivity and thereby increases profitability of an industry. This paper will emphasize on current material handling system used in the industry and the problems related to material handling and development of the new method for material handling. This new method uses economical material handling equipment, because it does not requires external power for its operation. The implementation of this equipment, reduces human effort and risk in transport of material between different work stations. Thus, material is conveyed from one machine to another machine easily and quickly. This paper discuss regarding the design and fabrication of economical material handling equipment. By using this equipment, material can be transported automatically from m/c to m/c. The equipment has material transfer capacity up to 20 kg & length of travel is 7 feet.**

***Keywords: - Productivity; design; fabrication; Economical; Automatic; Material handling equipment.***

## I. INTRODUCTION

Material handling system involves movement of material, machine from one place to another. Material handling and logistics, as defined by the "Material Handling Industry of America", is the movement, protection, storage and control of materials and products throughout the process of their manufacture and distribution, consumption and disposal [4]. A good material handling system seems to achieve the profitable product because about 80% of total cost of product is evolved in movement (non-value adding) of material and only 20% of cost is involved in carrying out actual processing of product. Various material handling Equipment should be well installed and mentioned for smooth and continuous flow of material. Plant layout should be carefully considered for effective material handling system. The modern roots of the industry can be traced back to the middle of the 19th century [4]. From then until the early 20th century, developments were made that led to today's modern forklifts. During World War II, as

production of equipment and artillery increased, material handling grew as well [5]. Transport, storage and handling of goods became paramount as the nation and world became more industrialized. Since that time, new innovations and technology have helped material handling grow into a $150 billion industry [5].Material handling systems range from simple pallet rack and shelving projects, to complex conveyorbelt and Automated Storage and Retrieval Systems (AS/RS). Ihsan and Hommertzheim (1992a) investigated various machine and AGV scheduling rules against certain scheduling criteria [6]. Simultaneous scheduling of machines and AGV-based material handling equipment in a flow-shop is considered by Raman *et al.* (1986), Kise *et al.* (1991) and many other authors [6]. In a flow-shop environment, the scheduling problem is comparatively simpler than that of a job-shop and assembly environment. Pandit and Palekar (1990) proposed branch-and-bound as well as heuristic solution procedures for the simultaneous scheduling of machines and material handling vehicles in a job-shop environment [6]. In the Similar environment, Ihsan and Hommertzheim (1992b) scheduled machine and material handling operations one at a time when they were needed, and assumed zero set-up time for all operations [4]. Although the approaches proposed by Pandit and Palekar (1990), and Ihsan and Hommertzheim (1992b) consider the simultaneous scheduling of machines and material handling vehicles in a job-shop environment [4].

## II. OBJECTIVES OF MATERIAL HANDLING SYSTEM

1. Eliminate, reduce or combine the handling of material machines and people.
2. Reduce the cost of handling activity.
3. Optimum utilization of building space.
4. To provide safe working environment. As most industrial accidents happens while handling of material.
5. Maximum utilization of material handling equipment.
6. Lower investment.
7. Prevention of damage to the material.

## III. CONVENTIONAL METHOD

In conventional method material is transferred by trolley, tray, Pallets, LiftTrucks, roller conveyers, portable hand hoist, pulley. In this type of equip. it requires extra helper (manpower) more efforts and time consuming with risk of damage of material and health [5]. After development, it is done by AGV, robots, cranes, elevators, trackless truck, power assisted hoists. Therefore traditional method is time consuming as well as it is expensive, due to high labor cost. Hence to solve this problem we decided to invent “MATERIAL HANDLING EQUIPMENT WITHOUT EXTRNAL POWER” which does not requires external power & less time consuming, which highly reduces cost.

In many industries for material handling, the different systems like belts, chains, rollers, cranes, hoists and carts, tractors, pallet transporters, forklifts, pallets, holders, reels are used. But there are some major problems of such material handling systems, to use in small and medium scale industries. In all industry material handling is important task.

For Example-

1. In small scale industries use of above systems increases investment cost.
2. Also structure of above systems required lot of space.
3. Balancing of job is difficult task when we use cranes.
4. Use of above systems is suitable only when the material handling is required for long distance, for short distance it is expensive.
5. Skilled operator is required for handling of above systems [5].

Hence best alternative is Material Handling System without using External Power.

1. This system reduces power cost of external energy.

2. It is suitable for small as well large scale system industries.
3. Ex: engine blocks, flywheels, gears, packing's etc.
4. Ease of maintenance, ease of access.
5. Particularly economical operation and high energy efficiency.
6. High degree of operational safety.
7. Environmentally-friendly operation.
8. Automatic with minimum labor requirement.

## IV. CONCEPTUAL DESIGN

1. CAD Drawing as shown in *figure no.1,* shows all parts of the equipment.
2. It consist number of parts as mentioned below.
3. There is base plate, which is supported by four pedestal bearing at each corner.
4. Wheels are mounted on shaft, which is supported in bearings.
5. Sprocket (small) is mounted on driven shaft (rear shaft).
6. Hollow pipe which has vertical slot is welded vertically at the top center of base plate.
7. Spring is freely inserted inside the outer hollow pipe.
8. Two horizontal bearing plates are welded at top of outer hollow pipe.
9. In this bearing plate shaft with pinion is mounted.
10. On same shaft at outer end sprocket (larger) is mounted.
11. Both sprockets are connected with chain drive.
12. Sprocket has 1:2.5 ratios.
13. Another hollow pipe having smaller diameter than outer pipe.
14. On this pipe rack is welded at correct position which is in mesh with pinion.
15. This pipe reciprocates in outer pipe.
16. Provision is made that rack moves inside the slot of outer shaft.
17. A square tray is connected at top of inner pipe.
18. Two smaller tension springs are connected between tray and base plate at front and rear side.

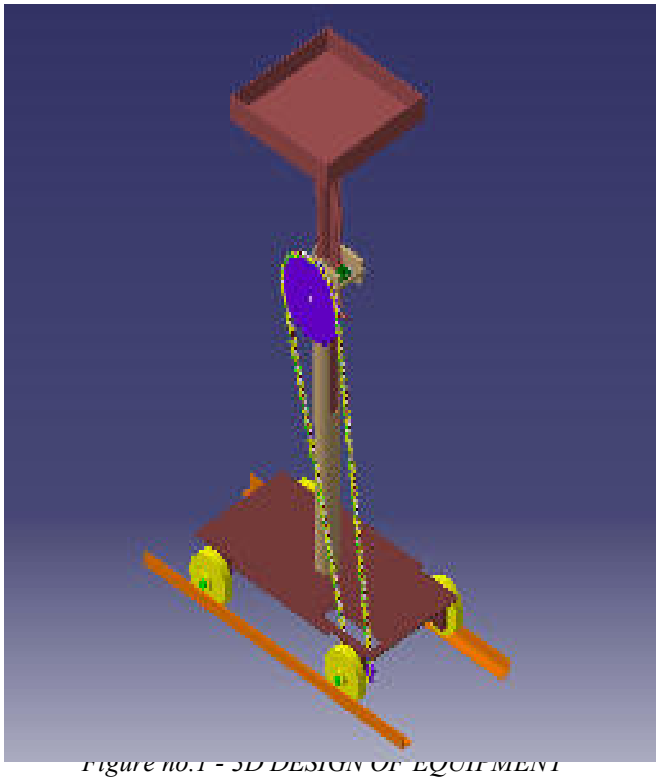

*Figure no.1 - 3D DESIGN OF EQUIPMENT*

## V. DESIGN AND SELECTION OF COMPONENTS

***Base Plate -***The base plate has rectangular shape having size (550 x 270 mm). This base plate takes the load of whole assembly. Material of base plate is mild steel. Base plate is as shown in*figure no.2*.

*Figure no.2*

***Wheels*** **-**There are four wheels used with diameter of 110 mm and they are made of cast iron. Wheel is as shown in*figure no.3*.

*Figure no.3*

***Shaft*** – Shaft diameter of 20 mm and length 380 mm and made of mild steel. Shaft is as shown in*figure no.4*.

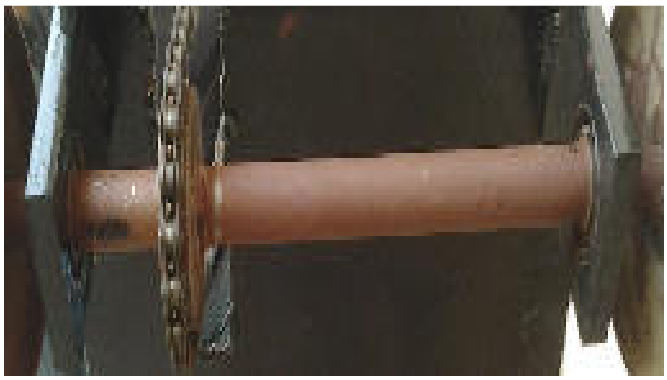

*Figure no. 4*

***Bearing Plate*** **-** There are two bearing plates for shaft mounting having size (100 x 50 x 16 mm), bearing (6003-2RS). Material of plate is mild steel. Bearing plate is as shown in*figure no.5*.

***Bearing Selection*** –

Shaft bearing will be subjected to purely medium radial load, hence we shall use ball bearings for our application [1].

Bearing specification for sprocket and pinion -

Selecting: - single row deep grove ball bearing as follows

Series: - 03 (medium series)

1. Shaft diameter = 10 mm
2. Weight = 148 N
3. Inner diameter of bearing (d) = 10 mm
4. Outer diameter of bearing (D) = 35 mm
5. Axial width of the bearing (b) = 11 mm
6. Dynamic load capacity (c) = 8060 N
7. Static load capacity ($c_0$) = 3750 N
8. Designation of bearing = 6003-2RS

***Bearing specification for wheel mounting -***

1. Inner diameter of bearing (d) = 17 mm
2. Outer diameter of bearing (D) = 40 mm
3. Axial width of the bearing (b) = 12 mm
4. Dynamic load capacity (c) = 9560 N
5. Static load capacity ($c_0$) = 4500 N
6. Designation of bearing = 6003-2RS

Approximate life of both bearing = 75 million revolution.

*Figure no.5*

***Sprocket and Chain -***Sprocket and chain drive mechanism is used to transfer the motion from main shaft to feeding shaft. Sprocket and chain is as shown in*figure no.6*.

We used simplex type of chain drive

The speed ratio of chain drive is **1:2.5**.

No of teeth on larger sprocket = 40

No of teeth on smaller sprocket = 15

*Figure no.6*

***Outer Pipe*** – Pipe having outer diameter 50 mm, height (680 mm).it has rectangular slot of size (330 x 25 mm). It is welded on center of base plate. It is made up of M.S. outer pipe is as shown in*figure no.7*.

*Figure no.7*

***Spring -*** Compression spring made up of oil tempered carbon steel (**C** 0.6% &**Mn** 0.6 -1%) Coil diameter 3 mm & free length 380 mm. spring is as shown in*figure no.8*.

*Figure no.8*

1. Coil diameter (d) = 3 mm
2. Mean diameter (D) = 35 + 3 = 38 mm
3. Outer diameter (Do) = 42 mm
4. Inner diameter (Di) = 35 mm
5. Modulus of rigidity (G) = 84 KN/$mm^2$
6. Spring index (C) = D / d
   = 38 / 3 = 12.66
7. Weight (W) = 148 N
8. Spring stiffness (k) = F / δ
9. Deflection (δ) = $8WD^3n$ / G $d^4$
   = $8\times148\times38^3\times27/84\times10^3 \times 3^4$
   = 258 mm
10. Deflection / active coil = δ/ n = 258 / 27
    = 9.5 mm
11. Spring stiffness (k) = 148 / 258
    = 0.6
12. Free length ($L_f$) = n x p = 27×14.5
    = 380 mm
13. Solid length = n x d = 27×3
    = 81 mm

***Rack and Pinion -*** Rack and pinion is made up of cast iron. No of teeth on pinion are 15 & rack 45. Velocity ratio or gear ratio is 3. Rack and pinion is as shown in*figure no.9.*

*Figure no.9*

***Design of pinion -***

1. Circular pitch (p) = π d/T
   = π × 30 / 15
   = 6.28 mm
2. Pitch circle diameter (D) = 30 mm
3. Module (m) = D/T
   = 30/15
   = 2
4. Diametric pitch = T/D
   = 15/30
   = 0.5
5. Gear ratio (G) = T/t
   = no. of teeth on rack / no. of teeth on pinion
   = 45/15
   = 3
6. Addendum of pinion = 10 × module
   = 2 mm
7. Dedendum = 1. 25 × 2
   = 2.5 mm
8. Clearance = 0.0.25 × module
   = 0.25 × 2 = 0.5 mm

9. Tooth thickness = 1.5708 × module
   = 1.5708 × 2 = 3.14 mm
10. Fillet radius = 0.4 × module
    = 0.4 × 2 = 0.8 mm
11. Face width = 10 × module
    = 10 × 2 = 20 mm
12. Addendum = d + ( 2 × module )
    circle diameter = 30 + 4
    = 34 mm
13. Dedendum = d - (2×1.15708×module)
    circle diameter = 30-(2×1.15708×2)
    = 25.37 mm
14. Depth of teeth = addendum + dedendum
    = 2 + 2.5
    = 4.5 mm
15. Working depth = 2 + 2
    of tooth = 4
16. Top land = 2 mm
17. Bottom land = 5 mm

***Design of rack -***

1. Module (m) = 2
2. Number of teeth = 45
3. Length = 300 mm.
4. Face width = 10 × module
   = 10 × 2
   = 20 mm
5. Working depth = 2 + 2
   of tooth = 4
6. Top land = 2 mm
7. Bottom land = 5 mm

***Inner Pipe and Tray*** –Pipe having outer diameter 40 mm, height 770 mm. It is made up of M.S. On this pipe, rack is welded. At the top of pipe tray is mounted. Size of tray is (32 x 32 mm), material of tray is sheet metal and supported on wood square block. Inner pipe and tray is as shown in*figure no.10.*

*Figure no.10*

***Damping Springs -*** Two tension springs are used to reduce the damping. Coil diameter of spring is 1.5 mm & length of spring is 250 mm. damping springs are as shown in*figure no.11.*

*Figure no.11*

## VI. WORKING

The actual working model is as shown in *figure no.12*. Material is loaded by worker in tray, due to self-weight of material rack vertically moves downward. It compresses the spring inside outer pipe. This vertical movement of rack is converted into rotary motion of pinion. As pinion mount on shaft to which sprocket is fixed. So this rotary motion is transmitted to wheels through chain drive. Therefore equipment with material moves forward by following the track and transfer the material one machining station to another machining station. After reaching destination material is unloaded by worker from tray, which removes load on spring then due to spring force it lifts the rack upward

it rotates pinion in reverse direction, which helps the equipment to reach its original position. Now the cycle is repeated.

*Figure no.12 – ACTUAL WORKING OF EQUIPMENT*

## VII. APPLICATIONS

It is used in various departments of industries such as:-

1. Machine shop
2. Foundry
3. Dispatch

## VIII. CONLUSION

By using this material handling system we can transfer material from one place to another place without external power. This material handling equipment can save time, money and labor cost. The cost of this material handling equipment is comparatively less. Because of Ease of maintenance, ease of access, high degree of operational safety, high energy efficiency and Environmentally-friendly operation, it is suitable for small as well larger scale industries.Ex: engine blocks, flywheels, gears, packing's etc

## REFERENCES

[1] Bhandari V. B. "Design of machine elements", volume I, Tata McGraw hill publication, 1999.

[2] Khurmi R. S. "Machine Design", volume II, McGraw hill publication, 1992.

[3] Apple J.M. "Plant Layout and Material handling" 3rd edition, Wiley, New York, 1977.

[4] https://webstore.ansi.org , Material Handling Industry of America.

[5] www.mheda.org/history.

[6] http://iopscience.iop.org/article

**M 109**

# Optimization Of Worm Gear Pair By Genetic Algorithm(GA)

1Ankit Gajera
1Student of Mechanical Engineering
ankitgajera9036@gmail.com
2Vivek Patel, 3Kartik Pipaliya
2Assistant Professor of Mechanical Engineering Department 3Assistant Professor of Mechanical Engineering Department Marwadi Education Foundation
Rajkot, India
vivekg.patel@marwadieducation.edu.in, kartikpipalia@marwadieducation.edu.in

**Abstract : A gear transmission problem is one of the most complex optimization problems because of relationship between different variables. A gear designer to compromise many design variables such as continuous, discrete and integer variable in order to determine performance of gear set. The worm gear optimization is very complex in nature since the consideration of multiple objective and number of design variables. Therefore more consistent and efficient optimization technique will be considered to obtain better result. For that purpose many optimization techniques have been developed and used for optimization of worm gear pair. However, their complexity and convergence problem other methods are not able to give optimal solution. A non-conventional algorithm namely Genetic Algorithm is used to find the optimal combination of design parameters for minimum centre distance of a worm gear pair. The Genetic Algorithm is an efficient search method which is work on Darwin's theory of survival of the fittest and use only the values of the objective function not use any derivative of function. The results of the proposed algorithm of various design variables along with additional constraint compared with analytical results. From the results it is observed that Genetic Algorithm gives better solutions for worm gear pair.**

***Keywords—Optimization; Genetic Algorithm; Minimum centre distanc; Worm gear pair.***

## Introduction

Worm and worm gear drive are widely used for transmitting power between two non-intersecting and perpendicular axes shafts. Due to its large reduction ratio, it is used for low to medium speed reducer in many engineering application. The worm gear design optimization is very complex in nature since the consideration of multiple objective and number of design variables. Therefore more consistent and efficient optimization technique will be considered for better result. For that purpose genetic algorithm is used which is work on Darwin's theory of the fittest and this algorithm use only objective function values not required any derivative of objective function.

## literature review

There have been a number of studies carried out to optimize gear pair with help of algorithms. Sa'id Golabi et al.[1] optimized one, two and three-stage gear trains by considering values for transmission

power, hardness of material and gearbox ratio. N. Marjanovic et al.[2] developed mathematical model for volume optimization of spur gear pair using software GTO (Gear Train Optimization). The result shows that the volume of spur gear pair is reduced by 22.5%. Mendi et al.[3] optimized the gear volume by GA was 1.47% lower than the gear volume obtained by analytical method. Savsani et al.[4] optimized the weight of gear trains using particle swarm optimization and simulated annealing algorithms. Thomption et al.[5] used quasi- Newton minimization method for the optimization of gears volume and surface fatigue life. Yokota et al.[6] optimized of a gear considering constrained such as bending strength of gear, tortional strength of shafts, and each gear dimension and they used non-linear integer programming (NIP) problem and compared using an improved genetic algorithm (GA). Cheng et al.[7] defines a new metaheuristic algorithm called Symbiotic Organisms Search (SOS) to numerical optimization and engineering design problems. They have studied twenty-six unconstrained mathematical problems and four structural engineering design problems and obtained results compared with other algorithms. Gologlu et al.[8] minimized volume of an automated preliminary gear trains using genetic algorithm. Chen et al.[9] investigated tooth working surface of ZN-type hour glass worm gear set under different lead angles, pressure angles and modules. Wang et al.[10] used modified iterative weighted method Tchebycheff (MIWT) method for optimized simultaneously size and weight of meshing gear, minimum tooth deflection and maximum useful life of gear set. X. Li et al. [11] developed method for the minimization centre distance and they established the upper and lower boundaries centre distance by using American Gear Manufacturers Association (AGMA) geometry factors.Tong et al.[12] optimize the centre distance and gear volume for internal gears. Abuid et al.[13] used the combination of min-max method and univariate search method for the optimization of gear volume, center distance, and dynamic factors of shafts and gears. Zarefar et al.[14] reviewed on random search algorithm for weight optimization of helical gear.

From above literature we seen that lot of research is carried out on spur and helical gears. But few researches are carried out on worm and worm gear. Therefore, worm and worm gear has been taken here for optimization purpose.

**methodology**

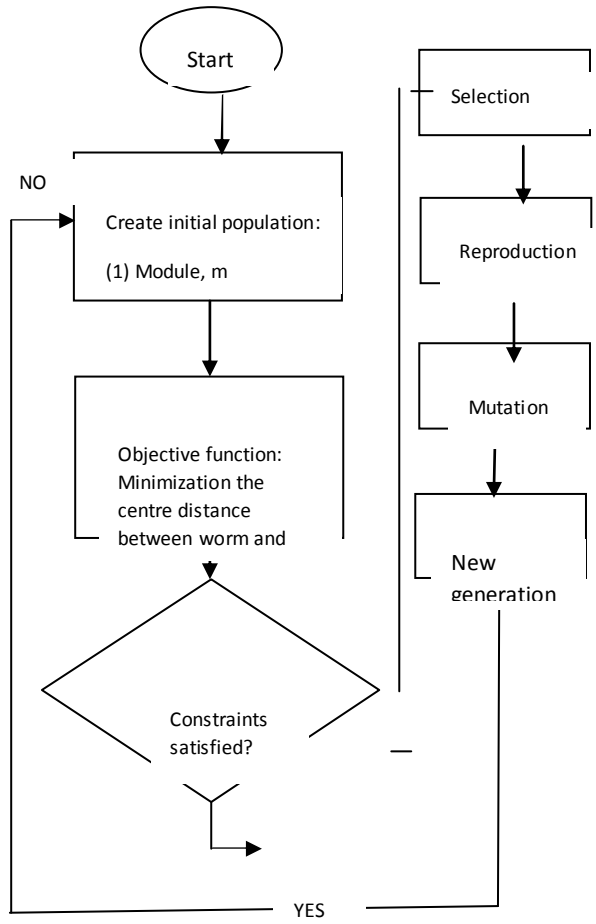


Fig. 1. Steps in GA for worm and worm gear

### A. Design Variables

Worm gear pair problem has been considered for the design optimization of worm and worm gear. Here, worm gear drive to transmit 1492 Watt at a worm speed of 1440 r.p.m. and gear ratio is 8.66. For that we have selected design variables as below.

(1) Module, m
(2) Number of teeth on worm wheel, $Z_2$

*B. Number of Constraint*

Constraints are conditions that must be satisfied in theoptimum design and include restrictions on the design variables. These constraints define the boundaries of the feasible and infeasible design space domain. The constraints considered for the optimum design are the following.

(1) Bending stress ≤ Permissible bending stress.

σь ≤ [σь]

Where $\sigma_b = \frac{1.9\,[M_t]}{m^3 q Z_2 Y}$

$$[M_t] = 71620\,\frac{H.P.}{N_1}\,i\eta * k * k_d$$

(2) Compressive stress ≤ Permissible compressive stress $\sigma_c \le [\sigma_c]$

Where, $\sigma_c = \frac{540}{\frac{Z_2}{q}} * \sqrt{\left\{\frac{[\frac{Z_2}{q}+1]^3}{q}\right\}} * \sqrt{[M_t]}$

(3) Centre distance between shafts.
$a \ge a_{min}$

Where $a = \left(\frac{Z_2}{q}+1\right) * \sqrt[3]{\left\{\frac{540}{\frac{Z_2}{q}[\sigma_c]}\right\}^2} * \sqrt[3]{[M_t]}$

(4) Module
$m \ge m_{min}$

Where, $m = 1.24\sqrt[3]{\frac{[M_t]}{Z_2 q Y[\sigma_b]}}$

(5) m ≥ 0

(6) $Z_2 \ge 0$

## results and dissussion

The setting parameters of genetic algorithm for worm and worm gear pair.

Population size: 20

Number of generation: 7

Number of variable: 2

Crossover fraction: 0.8

Mutation fraction:0.2

Bound limit: $0.1 \le m \le 0.4$ and $18 \le Z_2 \le 24$

### Input data requied for worm gear pair

### Power transmitted ($P_{input}$)= 1492Watt

Transmission ratio (i) = 8.66

Input speed ($N_1$) = 1440 r.p.m.

Material of worm = EN8D

Material of worm gear = Tin Bronze

Form factor (q) = 11

Normal pressure angle ($\emptyset_n$) =20º

Module (m) = 4 mm

Number of teeth on worm gear ($Z_2$) = 26

After solving the constrained optimization problem using Genetic Algorithm the following results are obtained.

TABLE I.**GA Results For Worm And Worm Gear**

| **GA Results For Worm And Worm Gear** | | |
|---|---|---|
| ***Generation*** | ***f-count*** | ***Best f(x)*** |
| 1 | 1060 | 7.3992 |
| 2 | 2100 | 7.4000 |
| 3 | 3140 | 7.4000 |
| 4 | 4180 | 7.4000 |
| 5 | 5220 | 7.4000 |
| 6 | 6400 | 7.3742 |
| 7 | 7440 | 7.0184 |
| 8 | 8600 | 7.0148 |

The table shows that the output values generated with function evaluations and optimum values generated by making iterations.

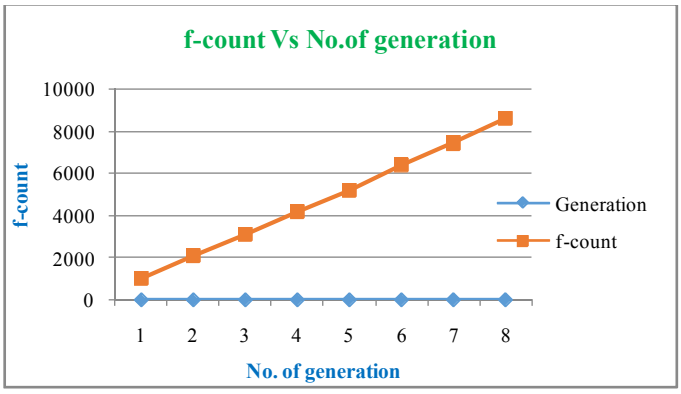


Fig.2. Graph between function count and number of iterations

Graph I generated between function count and number of generation and this graph shows that optimal value obtained at function evalution of 8600.

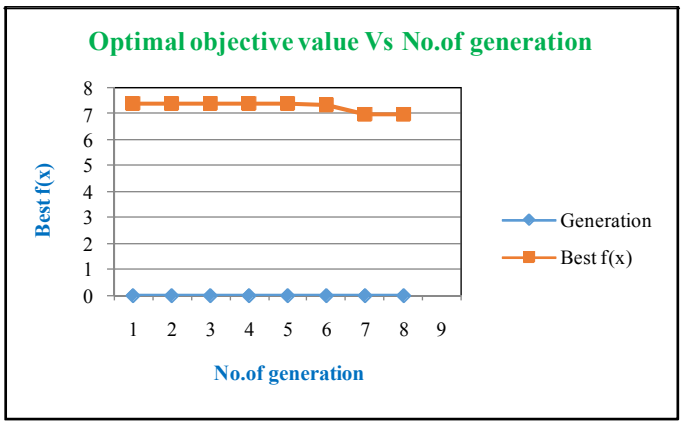


Fig.3. Graph between optimum objective values and number of iterations

Graph II generated between optimal objective value and number of generation and this graph shows that optimum function value obtained at 8$^{th}$ iteation is 7.0148.

TABLE II.

| Comparison Between Analytical And GA Results | | | |
|---|---|---|---|
| ***Parameters*** | ***Analytical result*** | ***GA result*** | ***% change*** |
| Centre distance, a | 74.00 mm | 70.148 mm | 5.200 |
| Module, m | 4.00 mm | 3.986 mm | 0.500 |
| Number of teeth on worm gear, $Z_2$ | 26.000 | 24.000 | 7.962 |

## *V.* CONCLUSION

The above results indicate that GA is highly capable of minimizing the centre distance of worm gear pair without deviating all constraints. Centre distance reduction is directly depends upon volume of gear pair and these reduce the amount of material consumed while manufacturing the gears. From that we can say that GA is capable of providing better results in short time compared to other optimization methods by considering above parameters. As a future work, GA can be used for optimizing worm gear pair by considering other design parameters and additional constraints.

## ACKNOWLEDGEMENT

The authors gratefully acknowledge student and faculty member of mechanical engineering department of Marwadi Education Foundation, Rajkot.

## REFERENCES

[1] S. Golobi, J. Javad,and M. Yazdipoor, "Gear train optimization based on minimum volume /weight design," Mechanism and Machine Theory,vol 73, pp.197-217, 2014.

[2] N. Marjanovi, B. Isailovic, M. Zoron, "A practical approach to the optimization of gear trains with spur gears," Mechanism and Machine Theory, vol 53, pp. 1-16, 2012.

[3] F.Mendi, T.Baskal, K.Boron, " Optimization of module, shaft diameter and rolling bearing for spur gear through genetic algorithm," Expert Systems with Application, vol 37, pp.8058-8064, 2010.

[4] V. Savsani, R.Rao, D. Vakhariya, "Optimization weight design of a gear train using particle swarm optimization and simulated annealing

algorithm," Mechanism and Machine theory, vol. 313, pp.603-616 2010.

[5] F. David, G. Shubhagm, S. Amit, "Tradeoff analysis in minimum volume design of multi-stage spur gear reduction units," Mechanism and Machine theory, vol. 35, pp.609-627, 2000.

[6] T. Yokota, T. Taguchi, M. Gen, " A solution method for optimal weight design problem of gear using genetic algorithm," Computers Industrial Engineering, vol. 35, pp. 523-526, 1998.

[7] M. Cheng , D. prayogo, "Symbiotic organisms search: A new metaheuristic optimization algorithm," Computer and Structure, 2014.

[8] C. Gologlu, Zeyveli, "A genetic approach to automate preliminary design of gear drives," Computer and Industrial Engineering, vol. 57, pp.1043-1051, 2009.

[9] K. Chen , T. Chung, " Mathematical model and worm and worm wheel tooth working surface of the ZN-type hourglass worm gear set," Mechanism and Machine Theory, vol. 44, pp. 1701-1712, 2009.

[10] H. Wang, Wang, "Optimal engineering design of spur gear set," Mechanism and Machine Theory, vol. 29, pp. 1071-1080, 1994.

[11] X. Li , G. Symmons, G. Cockerham, "Optimal design of involute profile helical gears," Mechanism and Machine Theory, Vol. 31, pp.717-728 1996.

[12] B. Tong, D. Walton, "The optimization of internal gears," International Journal of Machine Tools Manufacture, vol. 27, pp.419-504, 1987.

[13] B. Abuid, Y. Ammen, "Procedure for optimal design of a two stage spur gear system," JSME International Journal, vol. 46, pp.1582-1590, 2003.

[14] Zarefar H., Muthukrishnan S.: Computer-aided optimal design via adaptive random-search algorithm. Computer-Aided Design 40, 240-248 (1993).

[15] R.L. Norton, Machine Design An Integrated Approach., Pearson Education Asia, New Delhi, 2001.

[16] S. S. Rao Engineering Optimization Theory and Practice,. 4th edn. John Wiley and Sons, New York, 2009.

[17] Faculty of Mechanical Engineering, PSG college of Technology, Design Data Book., Kalaikathir, Coimbatore, India, 2013.

[18] D. W. Dudley Pratical Gear Design., McGraw Hill Book Co., New York.

## NOMENCLATURE

$[M_t]$ = Design twisting moment, Nmm

q =Diameter factor

$Z_2$ = Number of teeth on worm gear

Y = Form factor

H.P. = Horse power

$N_1$ = Speed of worm, r.p.m

**M110**

# SIMULATION AND ANALYSIS OF HYDRAULIC CIRCUITS USING AUTOMATION STUDIO SOFTWARE.

1Shashank Kulkarni, 1Samarth Gaikwad, 1Nitish Kulkarni 2 Uttam Bongarde
1 Mechanical engineering students 2 Assistant professor in Mechanical engineering
D.K.T.E 'S T.E.I. Ichalkaranji- 416115

**to**

**Abstract: Automation plays a vital role in modern manufacturing processes and fluid power systems are the major contribute part in it. Hydraulics/Pneumatics systems can be designed and analyzed by various softwares and Automation Studio is one of them. This software is widely used for design of circuits and their simulation for fluid power systems. In this paper we took as a case study, one of the mechanical foundries. They have been utilizing fluid power systems to automate their operations. These fluid power systems are complex. Hence the operators and maintenance personnel find it difficult to understand actual operation of the systems. This makes the maintenance and operation processes a bit time consuming which adversely affects the overall production rate. So to overcome these issues simulation of these systems is an effective way to make them more understandable to all. Thereafter, we build various existing fluid power circuits on automation studio. These circuits simulated and analyzed the system performance. System's performance graphically represented by studying the**

**steady state and dynamic behavior of the system. This study resulted in better understanding of circuits for operators and maintenance engineers also reduction in production and maintenance time which eventually led**

**Increase in production rate.**

***Keywords:*** *Hydraulic and pneumatics, Automation studio, fluid power circuits*

## 1.0 INTRODUCTION:

In today's modern manufacturing world it is almost impossible to find a product that is not been 'fluid powered' in some way or at some stage of its production. Fluid power is the science which deals with transmission of power through pressurized fluids. It is further subdivided into hydraulics and pneumatics. Hydraulic system deals with the generation and transmission of power using oil as a working medium, while Pneumatic systems utilize air or gas as a working medium [10]. These systems generally consist of flow generating and controlling elements like pump, compressor, direction control valves, pressure regulating valves and fluid conditioning elements. When all these elements are assembled, the system as a whole becomes complex. As a result,

system operators find it difficult to recognize the components and thereby the actual working of the systems. Also maintenance personnel are unable to fully analyze the reasons behind the system breakdown and troubleshoot the problems.

To overcome these issues, a wide range of software packages are available which assist us to design and simulate fluid power systems for better understanding and analyzing. Among the list, one of the software is "Automation Studio". It is a software system that enables end-users to design and simulate circuits of fluid power system. Technicians and Engineers are able to design, simulate and mathematically examine the projects in industries to enhance product quality, minimize the cost and boost productivity by means of this software [2].

## 1.1 BASIC HYDRAULIC SYSTEM:

The construction of basic hydraulic system is illustrated in the figure 1. The system includes an electric motor that serves as the power source. The electric motor generates the energy required to operate the system and perform the required work. The system contains basic components like pressure regulating valve, direction control valve, flow control valve, conductors and actuators.

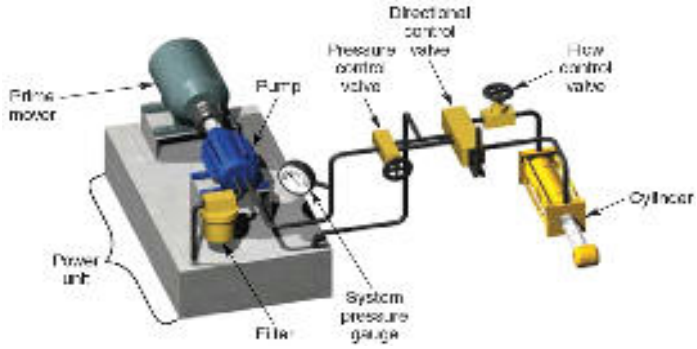


**Figure 1: Basic Hydraulic System**

As soon as the pump is operated, pressure differences are created within the system. Due to this, oil moves from the reservoir into the intake line of the pump. The intake includes a system filter where impurities are removed. Due to continuous rotation of the pump, oil is forced into the conducting lines. Further it is distributed to other system components [1].

The first system component the oil encounters as it is forced through the system lines is the pressure control valve, which is used to set system pressure. [1] After passing through pressure control valve the oil enters directional control valve. This valve leads the oil to the actuator. As the oil is forced into the actuator, it causes the actuator piston and rod to either extend or retract. Oil already present in the actuator on the piston rod side is forced out into conducting lines and returned to the reservoir through the directional control valve. By changing the position of the directional control valve the oil is forced to the other side of the

actuator piston, which forces the piston and rod to move in the opposite direction. Now oil from the other side of the piston is returned to the reservoir through direction control valve. The extension and retraction of the actuator does the work that the system was designed to perform. [1]

**1.2 AUTOMATION STUDIO:**

Automation Studio is a circuit design, simulation and project documentation software for fluid power systems and electrical projects conceived by Famic Technologies Inc. It is used for CAD, maintenance, and training purposes. Mainly used by engineers, trainers, and service and maintenance personnel. Automation Studio can be applied in the design, training and troubleshooting of hydraulics, pneumatics, HMI, and electrical control systems. [2]

Two versions of the software exist:

1. Automation Studio Professional
2. Automation Studio Educational

The educational version of Automation Studio is a lighter version used by engineering and technical schools to train future engineers and technicians. The software is designed for schools that teach technical subjects such as industrial technologies, mechatronics, electro - mechanical technologies, electrical &electronics, automation, and maintenance. Modeling and simulation are used to illustrate theoretical aspects. [2]

**1.3** Numbers of Investigations have been made to analyze the performance of fluid power systems using different simulation softwares.

Prof. Xiuxu and Prof. Shaunshaun proposed research on efficiency optimization for hydraulic system based simulation software. In that research is made for energy conservation techniques which will lead to efficiency improvement. They found that there are three methods to improve efficiency. First is by designing more reasonable and less energy consumption component. Second is by rational design of circuit so as to reduce the loss in the circuit pressure and flow rate. The last method is my matching system input with its output parameter to meet actual load requirement. In actual working of hydraulic system due to complexity of operation made and frequency change of system workload, how to make the running parameters match the real time load conditions to reach target that " energy needed is that of got" is still problem that needs further research and this can be resolved by data envelopment analysis (DEA).[3]

In the present development in fluid power controls are inter linked such as electropnuematic, hydropneumatic for the effective usage of power and to obtain effective output power. Fluid power systems have the capability to control several parameters such as pressure speed and position to a high degree of accuracy at high power level and also occupy less space.[4]

Giuffrida and Laforgia proposed case study which deals with simulation of working behavior of hydraulic breaker. The objective was to build a very detailed parameterized model that allows the reproduction of physical phenomena and measurement results. Experimental data were used to verify the model predictions with reference to accumulator pressure. [5]

Prof. Huang Lie et.al. worked on simulation and analysis of certain hydraulic lifting appliances under different working conditions. Being typical of mechanical and electronic hydraulic appliances, hydraulic lifting appliances has many working conditions due to its particularities. Properties of hydraulic system decide high efficiency stability as well as stability under different working conditions. Their research analyzes a certain hydraulic system through which design references can be offered. [6].

## 2.0 OBJECTIVES:

1. To understand the basic concepts of fluid power systems and identify the circuit elements of system.
2. To read and understand the circuits taken as case study.
3. To make complex fluid power circuits more understandable for workers and maintenance personnel in industry.
4. To mathematically analyze the system performance.

So overall efforts are to understand, design and analyze system performance for optimum results.

## 3.0 METHODOLOGY:

- For the study and analysis, various fluid power systems are taken into consideration. These systems are converted in the form of circuits using ISO JIC symbols.
- After the detailed study of the system the circuits are constructed on the software in systematic manner. The circuits consist of symbolic representation of elements of fluid power system.
- After the completion of circuit all the required parameters like

motor speed, permissible system pressure and dimensions of various components are defined. The load on the piston according to actual working condition is specified.

- After the completion of above operations the circuit is simulated. During simulation the pressure lines and return lines are shown in different color coding. Various parameters like pressure, temperature and flow are displayed during simulation which is identical to actual parameters.

- During the analysis graphs are plotted considering the various parameters like acceleration of piston, piston speed, flow and pressure at different sections. The performance of the system is analyzed by examining the graphs which will indicate how efficiently the system is performing under specified input parameters.

- Various possible failure conditions of the system are virtually generated in the software. These failure conditions are analyzed and the reasons behind it are detected.

## 4.0 SIMULATION AND ANALYSIS:

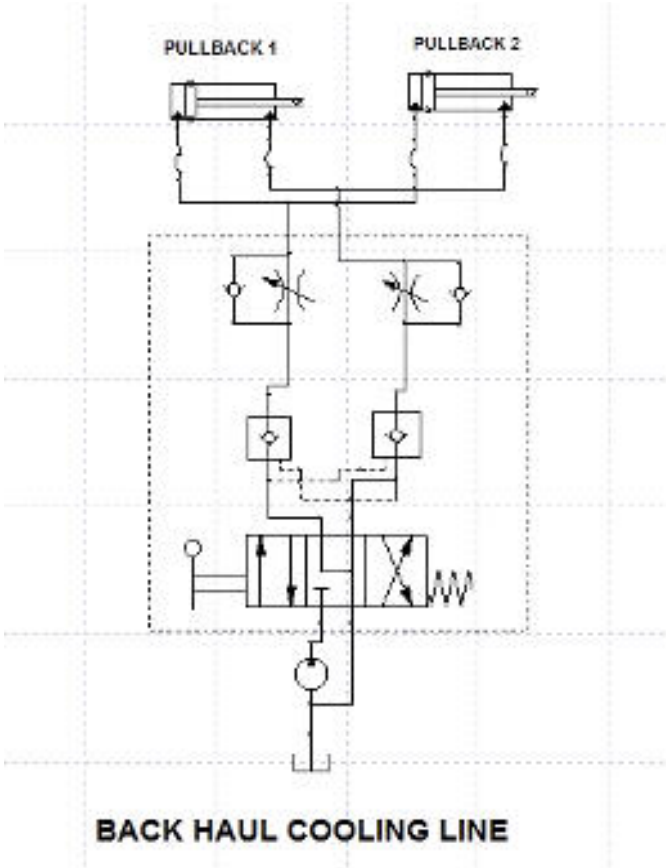


**Figure 2. Design of the circuit constructed on Automation Studio.**

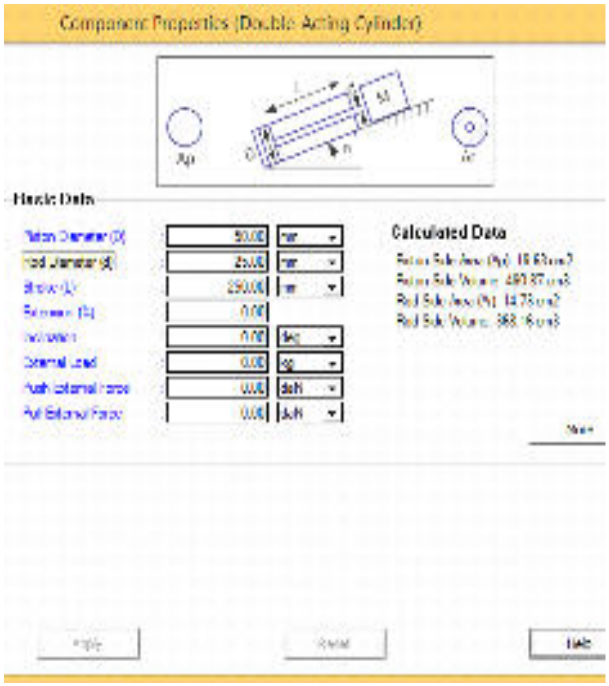


**Figure 3. Definition of various component parameters.**

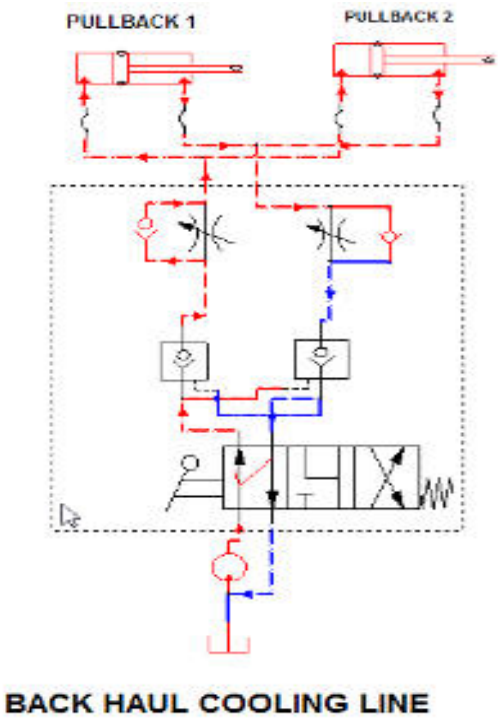


**Figure 4. Simulation of the circuit in the software. (Forward Direction)**

Above figure shows the simulation of hydraulic circuit in forward direction. The pressure lines are represented by red color while the return lines are represented by blue color. For the first position of directional control valve the piston is extended. When the lever of directional control valve is actuated the piston is retracted. The operation of pilot lines can be observed in the simulation.

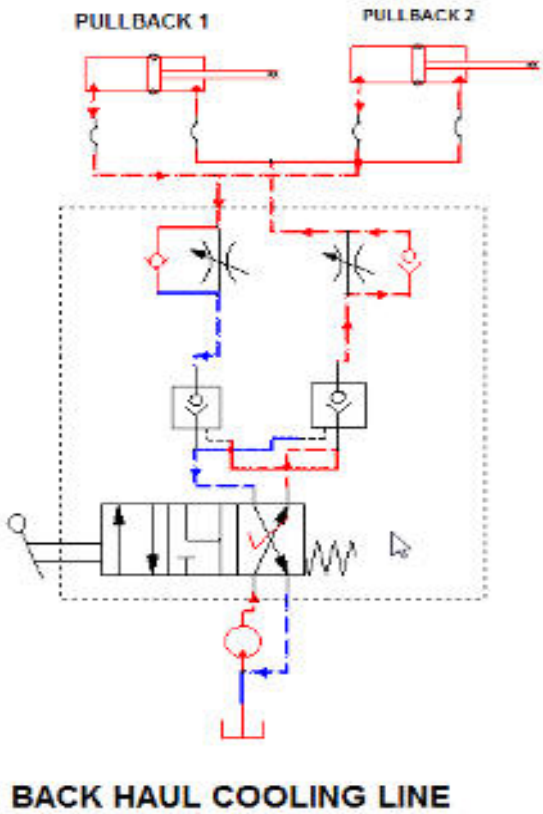


**Figure 5. Simulation of circuit in the software. (Reverse Direction)**

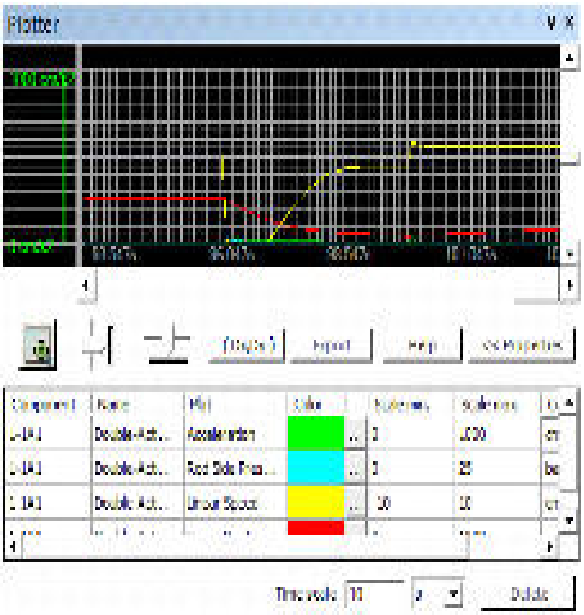


**Figure 6. Graph depicting behavior of various parameters during simulation.**

The behavior of various parameters of double acting cylinder like acceleration of piston, linear speed, rod side pressure are plotted on graph and analyzed. On Y-axis acceleration of piston is plotted while simulation time on the X-axis. By using color coding different parameters are displayed.

## 5.0 CONCLUSION:

This study helped us to understand the simulation process and analyze working behavior of hydraulic system. It made operators and workers to easily recognize the system components and visualize the working of system through simulation. From detailed parameterized model built on the software, the reproduction of physical phenomena and measurement results were obtained. These results can be further utilized for performance evaluation and improvement of the system.

## 6.0 REFERENCES:

[1] The Goodheart-Willcox Co. “Fluid Power Systems”.

[2] Anthony Espasito "Fluid Power with applications"

[3] Xiuxu Zhao , "Research on Operating parameters matching and Efficiency optimization of hydraulic system based on AMESim"

[4] Aya Moowafaq Abd Elsatar, Dr. Majid Ahmed "Design & Simulation of Electro-Pneumatic System using PLC Automation Studio.

[5] Antonio Giuffrida and Domenico Laforgia, "Modelling and Simulation of Hydraulic Breaker"

[6] Huang Lei1, Yuan Genfu, Chen Xuehui "Simulation Analysis of Certain Hydraulic Lifting appliance under Different Working Conditions”.

[7] Fudamentals of Fluid Power Control by J.Watton , 2009

[8] Allen, M. P. (1987). Computer simulation of liquids. New York, USA: Oxford University Press. 532.00724 ALL 008996, 009124-25

[9] Control of Fluid Power by D. McCloy, 1973 4. Industrial Fluid Power by Charles S. Hedges, 1965

[10]. Oil Hydraulic Systems- Priciples and Maintenance by S.R. Majumdar

**M 112**

# 3d Modelling of 5-Axis Drilling Fixture

Dinesh R. Bhagat1, Koushik S. Mattoo2, Omkar G. Pandav3, Rajkumar D. Patil4
1,2,3U.G. Student, Mechanical Engineering Department, DKTE's TEI, Ichalkaranji, Maharashtra.
5Assistant professor, Mechanical Engineering Department, DKTE's TEI, Ichalkaranji, Maharashtra.

**Abstract : Drilling fixture is used for locating and clamping the work piece in mass production. The production targets can be achieved by using drilling fixture. The setting and clamping time required for drilling operation is reduced by using 5 axis drilling fixture. It can be used for drilling holes at multiple axis and inclination for critical jobs like silencer grill. CATIA (V5 R19) software is used for 3D modeling of five axis drilling fixture. The considerable time is reduced during designing and manufacturing of silencer grill.**

***Keywords**: 5-axis drilling fixture, CATIA, 3D model, mass production, drilling operation.*

## I. INTRODUCTION

A fixture is a work-holding or support device used in manufacturing industry. Fixtures are used to securely locate (position in a specific location or orientation) and support the work, ensuring that all produced using fixture will maintain conformity and interchangeability. Using a fixture improves the economy of production by allowing smooth operation and quick transition from part to part, reducing the requirement for skilled labor by simplifying how work pieces are mounted, and increasing conformity across a production run.

To locate and immobilize work-pieces for machining, inspection, assembly and other operations fixtures are used. A fixture consists of a set of locators and clamps. Locators are used to determine the position and orientation of a work-piece, whereas clamps exert clamping forces so that the work-piece is pressed firmly against locators. Clamping has to be appropriately planned at the stage of machining fixture design. The design of a fixture is a highly complex and intuitive process, which require knowledge. Fixture design plays an important role at the setup planning phase. Proper fixture design is crucial for developing product quality indifferent terms of accuracy, surface finish and precision of the machined parts in existing design the fixture set up is done manually, so the aim of this project is to replace with hydraulic fixture to save time for loading and unloading of component. Hydraulic fixture provides the manufacturer for flexibility in holding forces and to optimize design for machine operation as well as process function ability.

## II. PROBLEM FORMULATION

There are many fixtures that are used for making of silencers. But the problem in the job is its continuous

clamping and unclamping. In this we are concerned about silencers used in generators. With growth of standby, prime and peaking power installations in highly populated areas design engineers have focused their attention on understanding how generators set noise is propagated and controlled. In general, two forms of regulations affect the

volume of noise to which individuals or public may be exposed: state and health administration. The sources of generators noise are engine noise, cooling fan noise, alternator noise, induction noise, engine exhaust, structural/mechanical noise. To overcome noise problem there are two types of silencers which are as following:
(1) Primary silencer.
(2) Secondary silencer

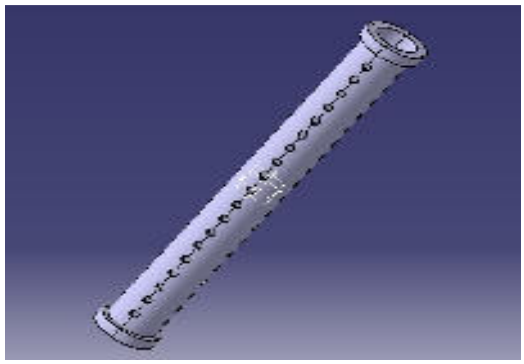

**Fig no. 1 silencer grill**

Generator silencers are provided at exhaust section. Silencers are generally of two chamber type silencers or spiral type of devices. Chamber type of devices tends to more effective but spiral type devices are more compact and may provide sufficient weak of force or intensity. Silencers are therefore made very compact and precise and cost

effective, to produce components in small amount of time five axis drilling fixture is a best option. Spiral pipe is holding on fixture and is tighten by spanner or wrenches. So we took a design of a silencer of Shree Diesel Services, Pune.

## III. STUDY OF FIXTURES

Fixture is a work holding device. It is used to hold work pieces in such a manner that less skilled labor or semi labor is required. By using a fixture economy is improved. Because a large no. of jobs is done with in a required amount of time.5 axis drilling fixture is shown below. The property of 5 axis drilling fixture is its robust, hardened, stainless steel construction. There is no need of springs which makes it very special. Unlike competitive products clamping geometry does not distort the work piece. Triangular geometry on the top eliminates the need of indexing pin. Triangular geometry provides 3 evenly spaced radial force vector for superior clamping.

**Types of fixture-**

Fixtures are predominant and are used in various operations like drilling, boring, milling and grinding. Fixtures are also made for inspection and assembly works. Moreover, fixtures are used castings and forging which are rough and irregular in shape. With the use of locators and proper clamps, handling of those jobs will be made easy in fixtures than any other standard work holding devices.

**Adjustable fixtures**- An adjustable fixture is those which is used in lathe by different cutting tools could be accommodated in one setup to turn work-pieces of different shape and length the position of cutting tool is adjusted by different gags.

**Drilling fixture-** A drilling fixture is used for making holes in the job they could be horizontal or vertical in nature. It allows space for the drill bit itself to continue through the work piece without damaging the fixture or drill. Also to guide the drill.

**Grinding fixtures-** When extreme accuracy is required for grinding parts like connecting rods, valve faces for bevel gears, grinding fixtures are used and they hold parts without any distortion. The positioning of the parts in fixtures is very important and clamping should be designed to cover the parts for which machining is not required.

**Welding fixtures-** They are used to hold the parts in required shape and are used from smaller parts to the larger parts of a plane before welding the parts are placed and positioned for the required shape. After clamping the parts welding work can be carried out.

**Assembly fixtures-** large components in aero planes are usually assembled using assembly fixtures. Pipelines and other frames which are so lengthy will be placed in the fixture and assembled. As the use of fixture will be more with lengthy and large components the fixture material has to stiffer to avoid deflection. Some parts are required to have simple operations like drilling or welding, after aligning with the adjacent parts. An assembly fixture should have to be constructed to accommodate such situations.

**Inspection fixtures-** The parts after getting finished with the manufacturing operation have to be checked for its accuracy in shape or in dimensions. That will be performed with inspection fixtures and they are extensively used in automotive industries. The fixture will be the master in shape and every part will be compared for its shape conformity.

**Milling fixtures-** The use of fixtures is oriented mostly with milling operation and there are different types of fixtures available with milling operation.

**Reciprocating Fixture-**In reciprocating milling fixture twin fixtures are mounted on a sliding table with its base Fastened to the milling machine. It facilitates the operator to unload or reload one work piece while the other one will be under machining by moving the sliding table in a straight line. The table movement will be achieved either by compressed air or hydraulic fluid.

**Straddle milling fixture-**This fixture is used where milling operation is required simultaneously on either side of a component. Also in taking heavy cuts during roughing operation two components could be loaded so that it's set up will save time.

**Indexing fixture-**when milling operation is required to fall on a circular path indexing fixtures is used. With multiple indexing head more than one job can be milled at the same time.

**Multiple milling fixture-**When milling two or more surfaces of a same part which are in relation with each other multiple head fixtures are used. This is one type of special milling fixture and is used in machining two cylinder faces of a V-engine cylinder block at a same time thereby saving more production time.

## IV. DESIGNING CONSIDERATIONS

Designing of fixtures depends upon so many factors. These factors are analyzed to get design inputs for fixtures. The list of such factors is mentioned below:

- The main frame of fixture must be strong enough so that deflection of the fixture is less as possible. This deflection of fixture is caused because of forces of cutting, clamping of the work piece or clamping to the machine table. The main frame of the fixture should have the mass to prevent vibration and chatter.
- Frames may be built from simple sections so that frames may be fastened with screws or welded whenever necessary.
- Those parts of the frame that remain permanently with the fixture may be welded. Those parts that need frequent changing may be held with the screws. In the situation, where the body of fixture has complex shape, it may be cast from good grade of cast iron.
- Clamping should be fast enough and require least amount of effort.

- Clamps should be arranged so that they are readily available and may be easily removed.
- Clamps should be supported with springs so that clamps are held against the bolt head wherever possible.
- If the clamp is to swing off the work, it should be permitted to swing as far as it is necessary for removal of the work piece.
- All locator's clamps should be easily visible to the operator and easily accessible for cleaning, positioning or tightening.
- Provision should be made for easy disposal of chip so that storage of chips doesn't interfere with the operation and the removal during the cutting process.
- All clamps and support points that need to be adjusted with a wrench should be of same size. All clamps and adjustable support points should be capable of being operated from the fronts of the fixture.
- Work piece should be stable when it is placed in fixture. If the work piece is rough, three fixed support points should be used. If work piece is smooth, more than three fixed support points may be used. Support point should be placed as farthest as possible from each other.
- The three support points should circumscribe the center of gravity of the work piece.
- The surface area of contact of support should be as small as possible without causing damage to the work piece. This damage is due to the clamping or work forces.

## V. DESIGNING PROCEDURE

**Steps of fixture design**

Successful fixture designs begin with a logical and systematic plan. When they do, chances are some design requirements were forgotten or underestimated. The work-piece, processing, tooling and available machine tools may affect the extent of planning needed. Preliminary analysis may take from a few hours up to several days for more complicated fixture designs. Fixture design is a five step problem-solving process.

**Step 1: Define Requirements**

To initiate the fixture-design process, clearly state the problem to be solved or needs to be met. State these requirements as broadly as possible, but specifically enough to define the scope of the design project. The designer should ask some basic questions: Is the new tooling required for first-time production or to improve existing production.

**Step 2: Gather/Analyze Information**

Collect all relevant data and assemble it for evaluation. The main sources of information are the part print, process sheets, and machine specifications. Make sure that part documents and records are current. For example, verify that the shop print is the current revision, and the processing information is up-to-date. Check with the design department for pending part revisions. An important part of the evaluation process is note taking. Complete, accurate notes allow designers to record important information. With these notes, they should be able to fill in all items on the "Checklist for Design Considerations." All ideas, thoughts, observations, and any other data about the part or fixture are then available for later reference.

It is always better to have too many ideas about a particular design than too few. Four categories of design considerations need to be taken into account at this time: work-piece specifications, operation variables, availability of equipment, and personnel. These categories, while separately covered here, are actually interdependent. Each is an integral part of the evaluation phase and must be thoroughly thought out before beginning the fixture design.

**Step 3: Develop Several Options**

This phase of the fixture-design process requires the most creativity. A typical work-piece can be located and clamped several different ways. The natural tendency is to think of one solution, then develop and refine it while blocking out other, perhaps better solutions. A designer should brainstorm for several good tooling alternatives, not just choose one path right away. During this phase, the designer's goal should be adding options, not discarding them. In the interest of economy, alternative designs should be developed only far enough to make sure they are feasible and to do a cost estimate. The designer usually starts with at least three options: permanent, modular, and general-purpose work-holding. Each of these options has many clamping and locating options of its own. The more standard locating and clamping devices that a designer is familiar with, the more creative he can be. Areas for locating a part include flat exterior surface (machined and un-machined), cylindrical and curved exterior surfaces. The exact procedure used to construct the preliminary design sketches is not as important as the items sketched. Generally, the preliminary sketch should start should start with the part to be fixture. The required locating and supporting elements, including a base, should be the next items added. Then sketch the clamping devices. Finally, add the machine tool and cutting tools. Sketching these items together helps identify any problem areas in the design of the complete fixture.

**Step 4: Implement the Design**

The final phase of the fixture-design process consists of turning the chosen design approach into reality. Final details are decided, final drawings are made, and the tooling is built and tested. The following guidelines should be considered during the final-design process to make the fixture. Less costly while improving its efficiency. These rules are a mix of practical

considerations, sound design practices, and common sense.

**Use standard components:** The economies of standard parts apply to tooling components aswell as to manufactured products. Standard, readily available components include clamps, locators, supports, studs, nuts, pins and a host of other elements. Most designers would never think of having the shop make cap screws, bolts or nuts for a fixture. Likewise, no standard tooling components should be made in-house. The first rule of economic design is: Never build any component you can buy. Commercially available tooling components are manufactured in large quantities for much greater economy. In most cases, the cost of buying a component is less than 20% of the cost of making it. Labor is usually the greatest cost element in the building of any fixture. Standard tooling components are one way to cut labor costs. Browse through catalogs and magazines to find new products and application ideas to make designs simpler and less expensive.

**i) Use prefinished materials:** Prefinished and preformed materials should be used wherepossible to lower costs and simplify construction. These materials include precision-ground flat stock, drill rod, structural sections, cast tooling sections, precast tooling bodies, tooling plates, and other standard preformed materials. Including these materials in a design both reduces the design time and lowers the labor cost.

**ii) Eliminate finishing operations:** Finishing operations should never be performed forcosmetic purposes. Making a fixture look better often can double its cost. Here are a few suggestions to keep in mind with regard to finishing operations.

**iii) Keep tolerances as liberal as possible:** The most cost-effective tooling tolerance for alocator is approximately 30% to 50% of the work-piece's tolerance. Tighter tolerances normally add extra cost to the tooling with little benefit to the process. Where necessary, tighter tolerances can be used, but tighter tolerances do not necessarily result in a better fixture, only a more expensive one.

PRINCIPLES OF LOCATION

The principle of location is being discussed here with the help of a most popular example which is available in any of the book covering fixtures. It is important that one should understand the problem first. Any rectangular body many have three axes along x-axis, y-axis and z-axis. It can more along any of these axes or any of its movement can be released to these three axes. At the same time the body can also rotate about these axes too. So total degree of freedom of the body along which it can move is six. For processing the body, it is required to restrain all the degree of freedom (DOF) by arranging suitable locating points and then clamping it in a fixed and required position. The basic principle used to locate the points is desirable below. It is made to rest on several points on the jig body. Provide a rest to work-piece on three points on the bottom x-y surface. This will stop the movement along z-axis, rotation with respect to x-axis and y-axis. Supporting it on the three points is considered as better support then one point or two points. Rest the work-piece on two points of side surface (x-z); this will fix the movement of work-piece along y-axis and rotation with respect to z-axis. Provide a support at one point of the adjacent surface (y-z) that will fix other remaining free movements. This principle of location of fixing points on the work-piece is also named as 3-2-1 principle of fixture design as numbers of points selected at different faces of the work-piece are 3, 2 and 1 respectively. If the operation to be done on the cylindrical object requires restriction of the above mentioned free movements also some more locating provisions must also be incorporated in addition to use of the VEE-block.

## VI. 3D MODELS USING CATIA SOFTWARE

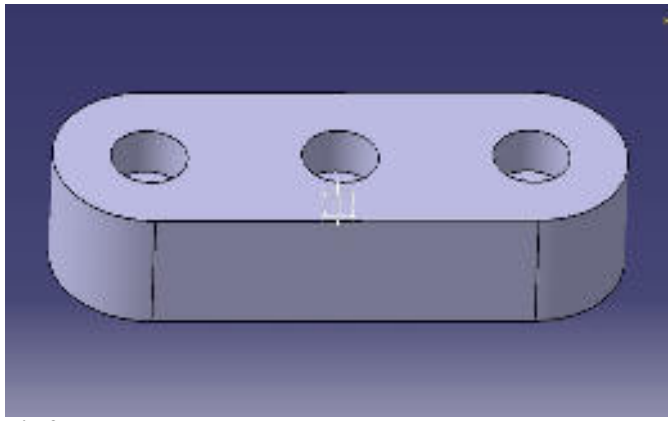

**Fig.2 base plate**

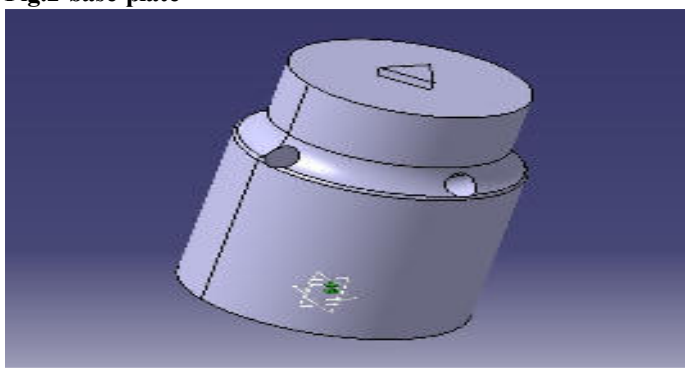

**Fig. 3 Fixture**

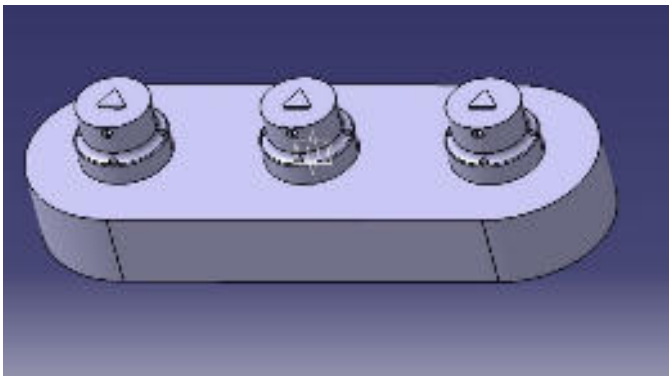

**Fig. 4 Assembly**

**DRAFTING OF THE COMPONENTS**

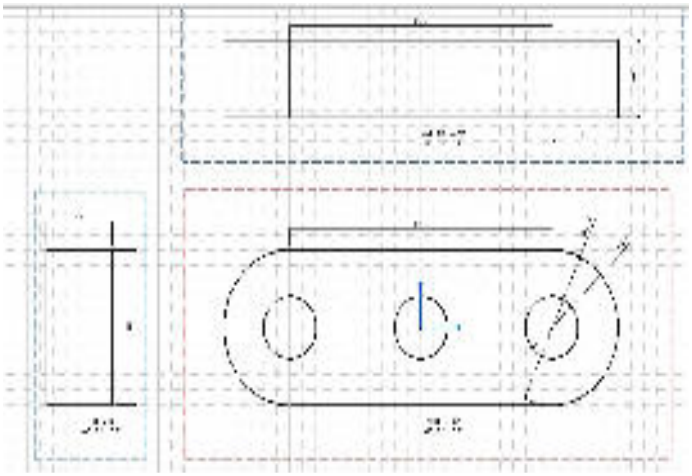

**Fig. 5 Drafting of base plate**

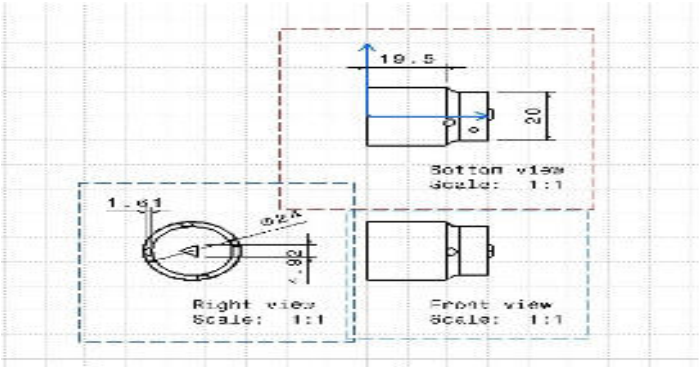


**Fig. 6 Drafting of fixture**

VII. RESULT AND DISCUSSION

Fig. 2 shows the base plate of the fixture designed. It is having 3 sockets for holding the fixture element. This is the part which will give the fixture a stable contact with the surface.

Fig. 3 shows the fixture which is to be fitted in the base plate and will hold the component. There are 3 similar fixtures which are to be fixed on the base plate.

Fig. 4 shows the assembly of the fixture having a base plate and the fixture on it.

Fig. 5 and 6 shows the drafting of the component with dimensions.

VIII. CONCLUSION

This paper addresses the study and designing of a fixture and its various components.

Concluding contribution of this paper in the field of fixture design are

- Fixture design for drilling purpose and related considerations.
- Study of different aspects of a fixture and its different type.
- Fixture design for an uneven part which is to be drilled from 5 axes.
- Time and manufacturing cost reduced.
- Clamping and unclamping became easy.

REFERENCES

[1] Hui Wang, Yiming(Kevin) Rong, Hua Li, Price Shaun "Computer Aided Manufacturing Laboratory" in the International Journal of Engineering Research and General Science ISSN:1085−1094 July15, 2010.

[2] B.S. Prabhu, S.Biswas(2001): Intelligent System for extraction of product Data From CAD models, Computer Industry.

[3] Henriksen, Erikk (1973) Jig and Fixture Design Manual New York: Industrial Press Inc.

[4] Dr. Yadavalli Basavaraj, Pawan Kumar BK, "Modelling and analysis of support pin for brake spider fixture" Issue 1, Volume 6, April 2013.

**M 113**

# Analysis of Bending Stress in Spur Gear using ANSYS

Azeem Ahmed Khan1, Sandeep Karake2, Shubham Kavathekar3, Sourab Gumtaj4, Prof. Rakesh Kolhapure5
1,2,3,4Students, 5Assistant Professor, Dept. of Mechanical Engineering
DKTE Society's Textile & Engineering Institute, Ichalkaranji, India
khanazeem40@gmail.com

**Abstract : Gears are machine members, which are most common elements used in power transmission. Mainly gears are used in automobile as well as in industrial area. A pair of teeth action is generally subjected cyclic stresses- Bending stresses. Due to this stresses, failure may occurs at the root of teeth and point of contact. To prevent this failure, the gear must be analyzed under operating condition. These types of failure can be minimized by analyzing of the problem during design stage and creating proper tooth surface profile with proper manufacturing methods. Finite element software's such as ANSYS provide a much more detailed stress distribution compared to traditional stress analysis. The design of spur gear model can be made using CATIA V5R20 software and design model is analyzed on ANSYS (WORKBENCH) R14.5. From the analysis, by comparing the result of ANSYS and theoretical results, it can be seen that the results are nearly equal, and the percentage is found to be 0.541%.**

***Keywords—: Bending Stress, Spur Gear, CATIA V5R20, ANSYS R14.5 (WORKBENCH).***

## Introduction

Gears are used for a wide range of industrial applications. They have varied application starting from textile looms to aviation industries. They are the most common means of transmitting power. They change the rate of rotation of machinery shaft and also the axis of rotation. Their function is to convert input provide by prime mover into an output with lower speed and corresponding higher torque. Toothed gears are used to transmit the power with a high velocity ratio. During this phase, they encounter high contact stress and bending stress. Combined action of both of them result in the reason of failure of gear tooth leading to fracture of a tooth under bending fatigue and surface failure, due to contact fatigue.

The transfer of power between gears takes place at the contact between the mating teeth. During operation meshed gears teeth are submitted to high contact and due to repeated stresses, damage on the teeth, in addition to tooth breakage at the root of the tooth are the one of the frequent causes of gear failure[1].

Here in this research paper Modelling and Evaluation of Bending Stress of Spur Gear using ANSYS is carried out using CATIA V5R20 for designing of spur gear and ANSYS WORKBENCH for analysis.

A) Design of Gear-

1) Pitch surface: - The surface of the imaginary rolling cylinder (cone, etc.) that the toothed gear may be considered to replace.
2) Pitch circle: - A right section of the pitch surface.
3) Addendum circle: - A circle bounding the ends of the teeth, in a right section of the gear.
4) Dedendum circle: - The circle bounding the spaces between the teeth, in a right section of the gear.
5) Addendum: - The radial distance between the pitch circle and the addendum circle.
6) Dedendum: - The radial distance between the pitch circle and the root circle.
7) Base circle: -An imaginary circle used in involute gearing to generate the involutes that form the tooth profiles.

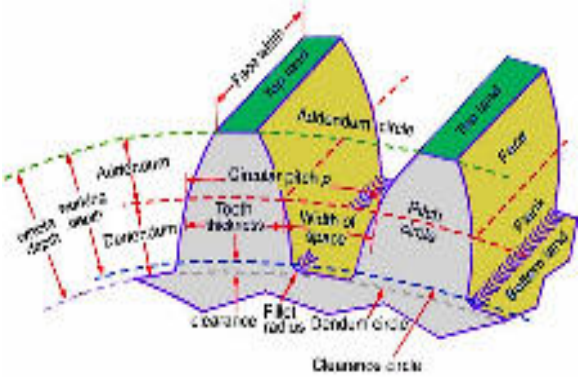


Fig 1:- Gear Nomenclature [2]

8) Clearance: - The difference between the dedendum of one gear and the addendum of the mating gear.

9) Circular thickness: - The thickness of the tooth measured on the pitch circle. It is the length of an arc and not the length of a straight line.

10) Tooth space: - The distance between adjacent teeth measured on the pitch circle.

11) Circular pitch [p]: - The width of a tooth and a space, measured on the pitch circle.

12) Diametral pitch [P]: - The number of teeth of a gear per inch of its pitch diameter. A toothed gear must have an integral number of teeth. The *circular pitch*, therefore, equals the pitch circumference divided by the number of teeth. The *diametral pitch* is, by definition, the number of teeth divided by the *pitch diameter*.

13) Module [m]: - Pitch diameter divided by number of teeth. The pitch diameter is usually specified in inches or millimeters; in the former case the module is the inverse of diametral pitch.

Table- 1:Dimension of Gear

| Sr. No. | Parameter | Formula | Gear 1 | Gear 2 |
|---|---|---|---|---|
| 1 | Number of teeth (N) | - | 100 | 46 |
| 2 | Module (m) | M | 1.57 mm | 1.57 mm |
| 3 | Pressure angle | - | 20 deg | 20 deg |
| 4 | Radius of pitch circle (Rp) | m*N/2 | 78.5 | 36.11 |
| 5 | Radius of base circle (Rb) | 0.94*Rp | 73.79 | 33.943 |
| 6 | Radius of addendum circle (Ra) | Rp+m | 80.07 | 37.68 |
| 7 | Radius of dedendum circle (Rd) | Rp-1.25*m | 76.53 | 34.148 |
| 8 | Face width | - | 16 | 16 |
| 9 | Fillet radius | 0.39*m | 0.6123 | 0.6123 |

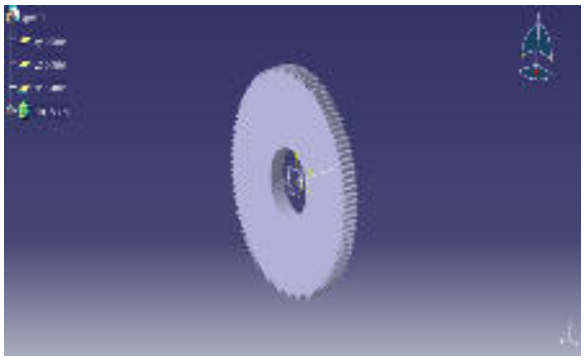

Fig 2:Model of Gear 01

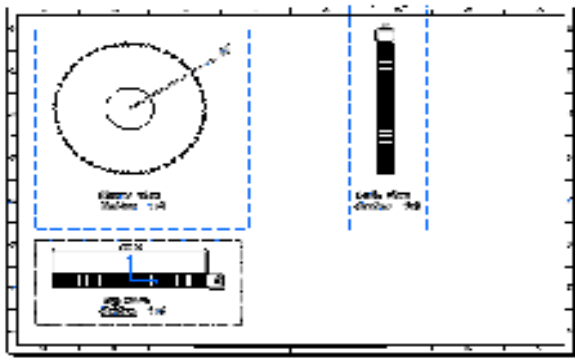

Fig 3:- Drafting of Gear 01

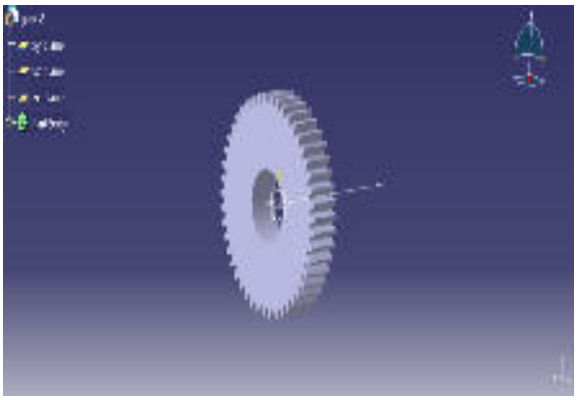

Fig 4:- Model of gear 02

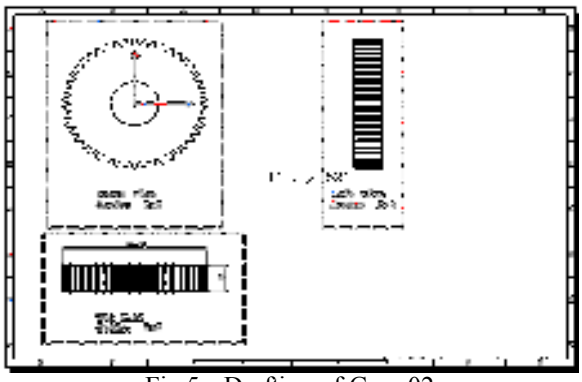

Fig 5:- Drafting of Gear 02

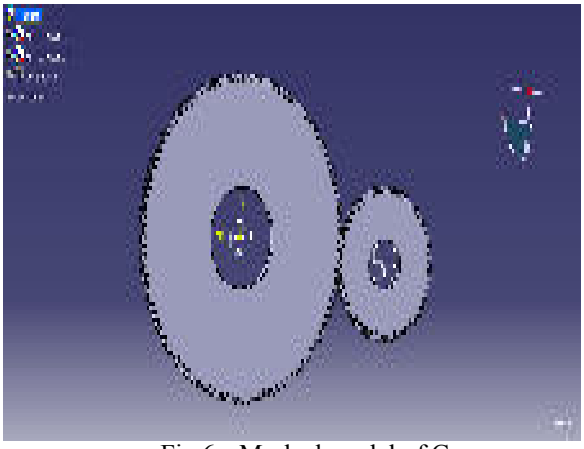

Fig 6:- Meshed model of Gears

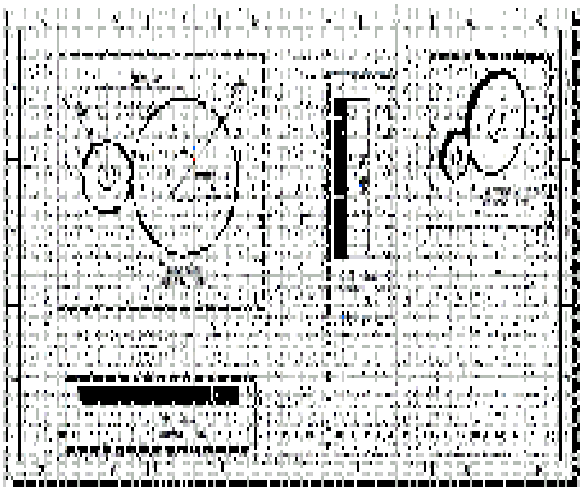

Fig 7:- Drafting of Assembly

## II ANALYTICAL APPROACH

For developing gear simulation approach, we make the following assumptions [3]:-

a) The full load is applied to the tip of the tooth in static condition.
b) The gears are perfectly parallel and transmit equal torque.
c) For the static analysis the driven gear is fixed in order to calculate gear strength
d) There is no friction in between the mating gears and forces due to tooth sliding friction and radial component are negligible.
e) The load is distributed uniformly across the full face width.
f) There is no interference between the tips and root fillets of mating teeth.
g) There is nonzero backlash and the root fillets are standard, assumed smooth and generating process.

### A) PROBLEM FORMULATION

Here the two spur gears are meeting; they are required to transmit the power to the parallel shaft. Now the two spur gears having 100 and 46 teeth respectively and material steel. The gear has subjected to torque of 11018.419 N-mm at shaft.As per the data which are as follows:

1. Power P = 0.75 KW

2. Speed N = 650 rpm
3. Torque applied at shaft Mt =

$$Mt = \frac{60 \times 10^6 \times KW}{2 \times \pi \times N}$$

$$= \frac{60 \times 10^6 \times 0.75}{2 \times \pi \times 650}$$

$$= 11018.419 \text{ N-mm}$$

4. Tangential component Ft =

$$Ft = \frac{2 \times Mt}{Pd}$$

$$Ft = \frac{2 \times 11018.419}{72.22}$$

Ft=305.13 N

5. Lewis equation ,
Where $\sigma_b$ is bending stress induced in gear tooth.

$$\sigma_b = \frac{Ft}{b \times Y \times m}$$ [2]

$$= \frac{305.13}{16 \times 0.401 \times 1.57}$$

$$\sigma_b = 29.17 \text{ MPa}$$

III. Finite Element Analysis

Finite element method is a numerical method for solving problem of engineering and physics [4]. It is also referred to as finite element analysis (FEA). FEA is a numerical method that offer a means to find approximation solution. FEA applied in engineering is computational tool for performing engineering. We are using ANSYS software for analyzing bending stress induced in spur gear.

Steps in FEA:-

1. Preprocessing: first step in preprocessing is to import or create model and define material properties then mesh generation is done. Then boundary conditions are applied.
2. Processing: This process is done by software.
3. Post Processing: In this step view the results of the solution. The result can be viewed in various formats: graph, value, animation etc.
4. Meshing: It is basically the division of the entire model into small cell so that at each and every cell the equations are solved. It gives the accurate solution and also improves the quality of solution.

Flow Chart 1:- FEA

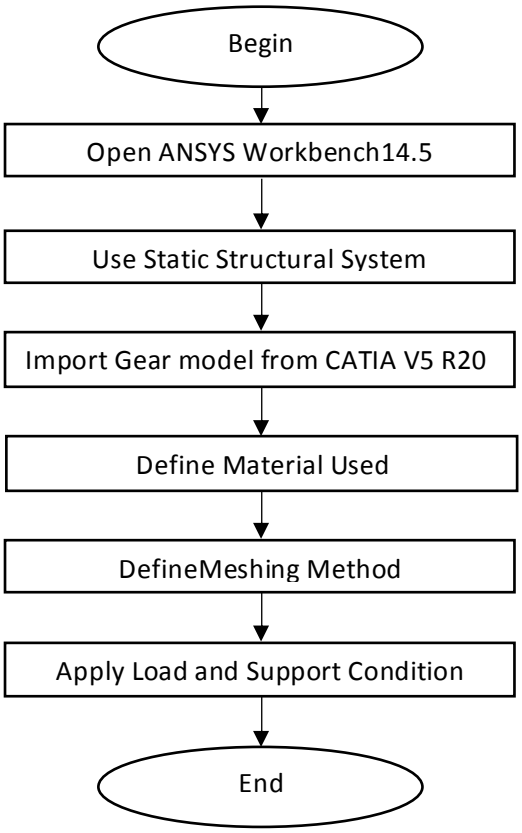


5. Material properties

In this paper both the gears are made by steel and there material properties are given in the table.

Table 2:- Material properties

| PARAMETER | VALUE |
|---|---|
| Young's Modulus ( E ) | 200 GPa |
| Poisson's Ratio | 0.3 |
| Tensile Strength Yield | 1500 MPa |
| Tensile Strength Ultimate | 1962 MPa |
| Density | 7850 kg/m3 |
| Thermal Expansion | 11 × 10-6 / 0C |

6. Boundary and loading condition

For checking the stress in the spur gear we need to consider assumptions made. For strength checking purpose the boundary condition of spur gear is fixed at the shaft bore and tangential force 305.13 N is applied on gear tooth. The boundary and loading condition is shown in figure.

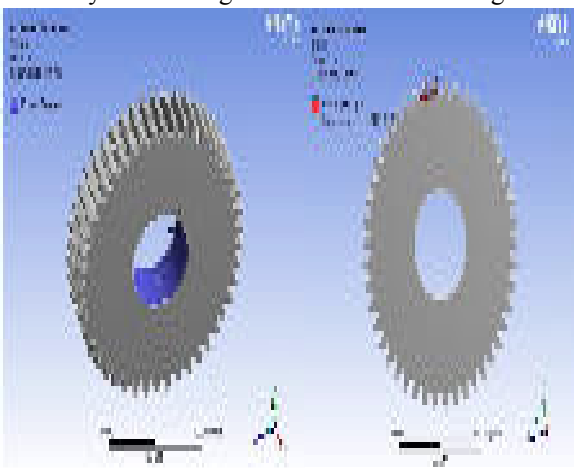

Fig 8:- Boundary and Loading Condition

7. FEA analysis result

With all the pre-processing steps the model is now set for the static analysis, where the initial results of the static analysis are shown in figure. The results of the static analysis for the spur gear taken are: The Maximum bending stress is 29.02MPa.

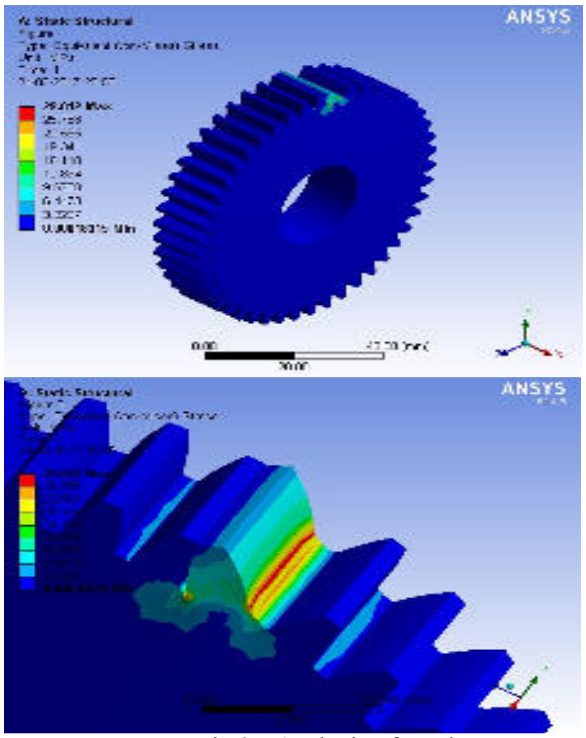


Fig 9:- Analysis of result

Next step is to check the value of stress generated at the root for the bending stress verification. Figure Show the results are coming similar as per the analytical approach, which is shown in table.

Table 3:- Bending stress

| | Analytical Method | Finite Element Method | % Error |
|---|---|---|---|
| Bending Stress | 29.17 | 29.012 | 0.541 |

As per the table we can say that the analysis which we are doing of considerable for further analysis and modification.

## CONCLUSIONS

The parametric model is capable of creating spur gear with different modules and number of teeth by modifying the parameters and regenerating the model. Sets of gear having same module and pressure angle can be created and assembled together.It is possible to carry out finite element analysis such as bending stresses between gear teeth pair. Maximum stress occur at the root of the tooth.

From the analysis, by comparing the result of ANSYS and theoretical results, it can be seen that the results are nearly equal, and the percentage is found to be 0.541%.

## REFERENCES

[1] C. M. Meenakshi, Akashkumar, Apoorva Priyadarshi, Digant kumar dash and hare Krishna, “Analysis of spur gear using finite element analysis”, ‘Middle-East journal of scientific research’, ISSN: 1990-9233, PP: 1672-1674.

[2] V. B. Bhandari, “Design of machine elements”, McGraw Hill Education (India) Private Limited, 3rd Edition.

[3] Shinde S. P. ,Nikam A. A. and Mulla T. S. , “Static analysis of spur gear using finite element analysis” , ‘IOSR journal of mechanical and civil engineering’, ISSN:2278-1684, PP:26-31.

[4] Pradeep Kumar Sing, Manwendra Gautam, Gangasagar and Shyam BihariLal,“ Stress Analysis spur gear design by using ANSYS workbench”, ‘International journal of mechanical engineering and robotics research’, ISSN-2278-0149, Vol-3,No-3, July 2014

[5] Sajid Hussain Din, Vivek Aggarwal, Mohammad Jebran Khan and ArunishMangla, “Investigation of bending stress on spur gear tooth at design stage by finite element modelling”, ISSN:2331-5747,Volumn-3,PP:13-18.

[6] Ali Raad Hassan, “Contact stress analysis of spur gear teeth pair”, ‘World Academic of science, Engineering and technology, International journal of mechanical, Aerospace, Industrial, Mechatronics and Manufacturing Engineering’, Vol: 3, No: 10, PP-1279-1284.

[7] Ram Krishna Rathore, Abhishek Tiwari, “Bending stress analysis and optimisation of spur gear” , “ International journal of engineering research and technology(IJERT)”, ISSN:2278-0181 VOL.3 Issue 5, May 2014

[8] Deviprajwal. S. Shetty, K.G. Gurukiran, Manish, Manish R. Jagtap, Prashantha, “Design and evaluation of bending stresses of a spur gear using ANSYS”, International journal of emerging research in management and technology, ISSN: 2278-9358(volume-5, issue-5), PP: 245-248, 2016

**M 114**

# Design & Fabrication of Bi-directional Desert Air Cooler

Shreya S. Katu1, Rutuja R. Atigre2, Poonam.Gurav3, Zuveria A.Bagwan4,Rajkumar D. Patil5
1,2,3,4 U. G. Student, Mechanical Engineering Department, DKTE's TEI, Ichalkaranji.
Assistant professor, Mechanical Engineering Department,DKTE's TEI, Ichalkaranji.
shreyakatu2304@gmail.com

**Abstract: Desert or Evaporative air cooling is the most eco-friendly and energy efficient technology for cooling, since its inception particularly in the areas where climatic conditions are hot and dry. In Rajasthan (India), during summer Dry Bulb Temperature (DBT) of air may reach up to 48 ˚C while relative humidity stays below 50%. During present study efforts were made to make desert air cooling system more versatile. In the process of study a Bi-directional desert air cooler has been developed which can be utilized for the purpose of air cooling.The "Bi-directional desert air cooler "as the name suggests that it is the modification of the conventional air cooler. This paper investigate on changing structure of desert air cooler and add a new aesthetic look by providing two fans by giving pentagonal shape to cooler. Thus the air flow capacity of cooler increases in same size of cooler as that of conventional air cooler. This allows cooling over large distance hence can easily implement in conference hall, industries, shopping mall, etc. Above mention concepts are taken into consideration for easiness and energy efficiency taken with zero pollution and to avoid 'Legionella' disease.**

**Keywords**—Evaporative Cooling, Wet Bulb Temperature, Dry Bulb Temperature, Bi-directional desert air cooler, Humidity.

## I PROBLEM IDENTIFICATION:-

Today in the 20th century, the world is facing a major problem of global warming due to rapid industrialization. In India, during summer season the average temperature is about $40^0$C TO $45^0$C. It even reaches up to $48^0$C to $50^0$C in the month of June. To maintain comfortable condition (i.e. temperature and humidity) in the summer season various types of appliances in the market**.**

In India, the average income of common man is not so high, common man cannot afford these appliances because of their high cost. Another problem is scarcity of electricity, especially in villages; the load shading is 14 to 16 hours a day.

## II. DEVELOPMENT OF IDEA:-


Air Cooler is one of the appliances that keeping the atmosphere cold. The basic idea of water cooling is to find a medium that can handle and transport heat more efficiently than air. Water has a good ability to retain heat, in the meantime stay in a liquid form. As long as can circulate cool water to the hot parts. Water can cool it down more efficiently than air.

Method of Air cooling is a dissipating heat. which works by making the object to be cooled have a larger surface area or have an increased flow of air .Evaporative cooling is based on a physical phenomenon in which evaporation of a liquid into surrounding air cools an object or a liquid in contact with it. As the liquid turns to a gas, the phase change absorbs heat. Latent heat of evaporation. Water is an excellent coolant because it is plentiful, non-toxic, and evaporates easily in most climates. The concept, was refined, became the evaporative coolers which will provide a low-cost, alternative to refrigerated air conditioning. Fresh outside air is pulled through moist pads where it is cooled by evaporation and circulated through a house or building by a large blower.

## III. LITERATURE REVIEW:

**Shrivastavaet** al.in his paper investigates the performance of coconut coir fiber, in evaporative cooling pads . This pads are
fabricated and tested on law cast desert cooler use in this region .the results are coconut coir fiber pad similar cooling effectiveness of near about 60% and the relative humidity also drop. Observed 80to 85% Aspen wood to 50-60% of coconut coir pad the coconut coir pad from 27 to 32˚C commercial development pads good performance and easily availability all over the country the life of coconut coir pad as compared to aspen wood pad is more.

**AshokKumarSharma** and **Pawan Bishnoi** in his paper discussed to save electricity. The developed desert cooler which is described in this paper uses naturally blowing air to generate the effect the cooling effect.The naturally blown air is circulated inside the roomthrough desert cooler. A testing setup is presentwhich was prepared to test the effectiveness of thiscooler. This experiment is clearly providing coolingwithout using electricity for blowing the air.

Chandra [illegible]thari and NitinBorkar It is themodifi[illegible]the conventionaldessert cooler. It is the air conditioner cum refrigerator for people who can't afford costly equipment's like air conditioner,refrigerator and other such appliances. In this modification mostly make, a purifier humidity controller and connecting tubes or pipes. The desert cooler can be used to store regular food items,vegetables and fruits etc.
the easiest energy saving option.

## IV. RESEARCH METHODOLOGY:-

In order to increase air flow capacity of cooler and to cover the wide area of room in same size of cooler. We modified the design of cooler from typical square to pentagonal shape. So as to satisfy above condition we provide two effective surfaces delivering cooled air. Due to pentagonal shape, it becomes possible to add one more fan without decreasing number of cooling pad. Hence the air flow capacity increase and larger area can be cover in compact size. Due to this structure cooling efficiency has increase. Increase in number of fans offer Bi-directional cooler to give combine output of two common cooler in one, which in turns save the capital as well as running cost.

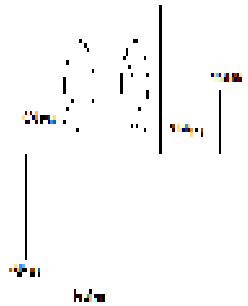

Fig.1: MODEL DIAGRAM (2D) OF DESERT COOLER

## V. CONSTRUCTION:-

### 1. Fan:-

Air cooling systems in Cooler most commonly rely on forced air. Forced air is passed through cooling elements and circulated to the desired locations. Blower provides this air movement.. The fan efficiency depends on the type of fan and impeller. As the flow rate increases, the efficiency increases to certain height. Material of the fan used is plastic .

Fig.2: FAN

### 2.Fan motor:-

Motor is used to run the fan .the Dc motor is used to run the fan , this type of motor is commonly installed in all coolers . itis istalled at inner side , having 1400 rpm speed

**3.Centrifugal Fan:**

1. Radial fans are industrial workhorses because of their high static pressures (upto 1400 mm WC) and ability to handle heavily contaminated airstreams. Because of their simple design Radial fans are well suited for high temperatures and medium blade tip speeds.

2. Forward-curved fans are used in clean environments and operate at lower temperatures. They are well suited for low tip speed and high-airflow work - they are best suited for moving large volumes of air against relatively low pressures.

3. Backward-inclined fans are more efficient than forward-curved fans. Backward-inclined Fans reach their peak power consumption and then power demand drops off well within their useable airflow range. Backward-inclined fans are known as "non-overloading" because changes in static pressure do not overload the motor.

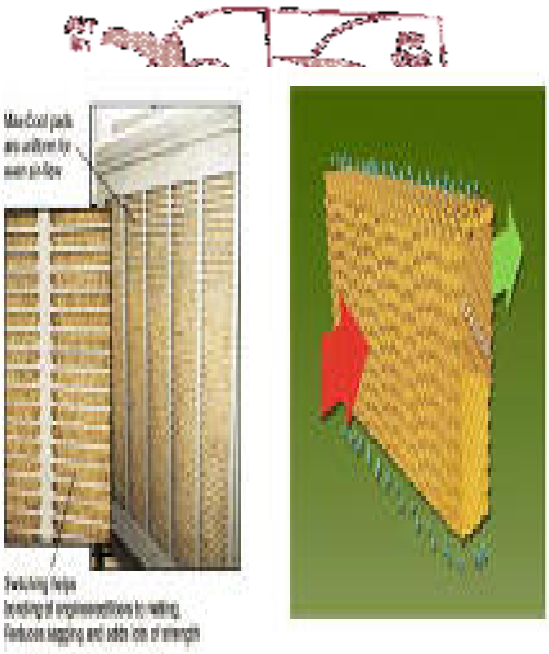

Evaporative cooler uses water so it is necessary to fill the cooler with water. So that the cooling take place. Water reservoir also allows the heavy dust particles to settle down and hence prevent the wear of water pump. Water reservoir should be enough large to store sufficient amount of water required for working.

**5.Cooling pad:-**

Most of the cooling pads are made of either aspen fibre or cellulose. A cellulose pad typically needs more air and water flow than does an aspen pad. More evaporation can take place through a 6-inch pad than a 4-inch pad. Wide Range of Evaporative Cooling Pads is available in the market. Evaporative Cooling is the process in which air is cooled by using the heat in the air to evaporate the water from an adjacent surface. A temperature reduction of 10 to 200C (50-68 degree F) can be achieved by passing the hot fresh air through the wetted pads. Eco Cool Evaporative Cooling Pads that were manufactured using special cellulose material. Top material is useful in achieving high cooling efficiency and ensuring degradation resistance. The pads are known for their exceptional wetting properties and airflow to achieve maximum.

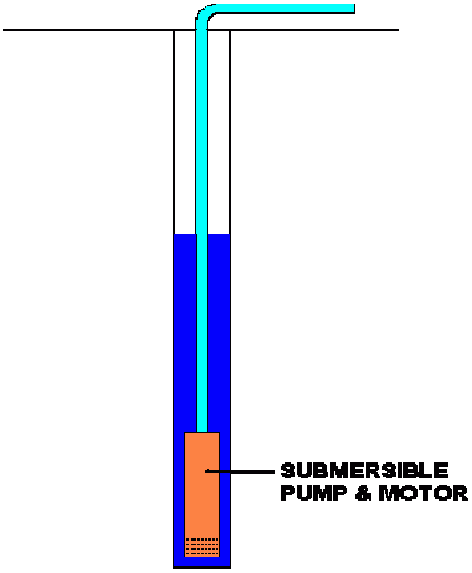


Fig.4 :COOLING PAD

**6.Submersible pump:-**

Typically the pump will be shaped like a long narrow cylinder so that it can fit down inside of a well casing. Although most submersible pumps are designed to be installed in a well, many can also be lowered into a lake or stream provided the water is deep enough. Some (not all!) may be installed sideways in shallower water. Another common installation method for lakes and rivers is to mount the submersible pump underwater to the side of a pier piling or a post. Some are attached to the bottom of a float. Submersible pumps don't need to be primed since they are already under water. They also tend to be more energy efficient because they only push the water, they don't need to suck water into them. Most submersible pumps must be installed in a special sleeve if they are not installed in a well, and sometimes they need a sleeve even when installed in a well. The sleeve forces water coming into the pump to flow over the surface of the pump motor to keep the motor cool. Without the sleeve the pump may over-heat. Because the power cord runs down to the pump through the water it is very important that it be protected from accidental damage. You wouldn't want a boat tangled up in the cord or a snapping turtle or alligator to bite through it! Many submersible pumps are "multi-stage" because of their high cost. Another problem is scarcity of electricity, especially in villages; the load shading is 14 to 16 hours a day.

Fig.5: SUBMERSIBLE PUMP

Fig.6: BI–DIRECTIONAL DESERT AIR COOLER

**Specification of the components:-**

| Component | Specifications | Quantity |
|---|---|---|
| Fan cum motor assembly | Voltage- 230 V<br>Sweep – 300mm<br>Frequency- 50 Hz, single Phase.<br>RPM - 1400<br>Power – 45 watts | 2 |
| Submersible pump | Flow rate - 900litres/hour<br>Voltage -230 volts<br>Power – 20 watts | 1 |

Chart no.:1 SPECIFICATION CHART

**VI. PRINCIPLE AND WORKING:-**

**5. Switches:-**

There are three switches are provided for the operation of cooler:

1. Switch 1 for single fan operation
2. Switch 2 for second fan operation
3. Switch 3 for motor on off

When all three switches are in on position then the 2 fans is in on position and water pump lifts the water from sump and circulates it on the cooling pad then because of heat transfers from the cooling pad the air which enters into the cooler cools down and supplied to the room with the help of.fan.

Principle:-

Air cooler works on the principle of cooling by

the evaporation of water which is present in the cooler. This cooler are also called desert cooler. They require water, which is filled in this cooler.

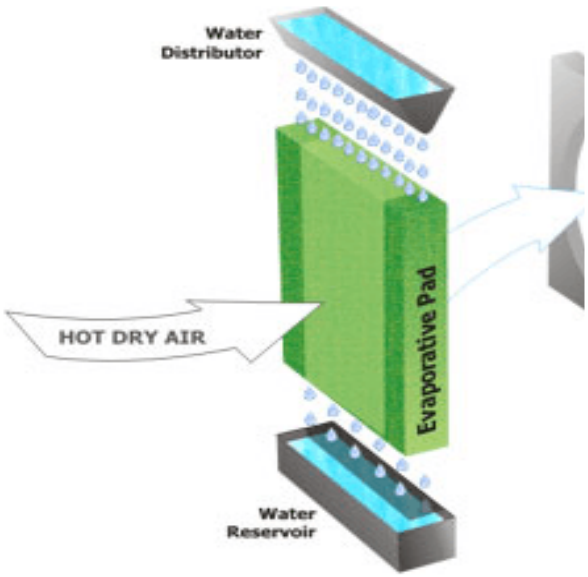


Fig.7:EVAPORATIVE PAD

Working:-

A Cooler nit uses a fan to draw the air through a wetted membrane, or pad which provide a large surface area for evaporation of water into air. This pads are made up of wood shaving from the aspen trees is a traditional choice. Small distributors' tubes supply water to the top of the pads. Water gets soak in the pad and thanks to gravity trickles through them to collect water in a sump at the bottom of cooler.

A small recirculating pump sends the collected water back to the top of the pads. A fan draws air through the pads, where evaporation drops the temperature approximately 20 degrees. The fan then blows this cooled air into the house. Small units can be installed in a window, blowing cooled air directly into a room. Larger units can blow air into a central location, or the air can travel through ductwork to individual rooms.

Normal air conditioning is a closed system, taking air from inside a house and recycling it. For air conditioning to function properly, doors and windows should be closed. Evaporative cooling, however, takes air from outside the house. For evaporative cooling to work properly, the cooled outside air must be allowed to escape. By choosing which doors or windows in your home you leave open, we can to help direct the flow of cooled air to areas where it is needed.

The Principles of Evaporative Cooling as water is evaporated, energy is lost from the air, reducing the temperature. Two temperatures are important when dealing with evaporative cooling systems.

1. Dry bulb temperature.
2. Wet bulb temperature.

When considering water evaporating into air, the wet-bulb temperature, as compared to the air's dry-bulb temperature, is a measure of the potential for evaporative cooling. The dry and wet bulb temperature can be used to calculate the relative humidity.Evaporation will take place when the humidityis below 100% and the air begins to absorb water. Any given volume of air can hold a certain amount of water vapour and the degree of absorption will depend on the amount it is already

The cooling effect is produce due to the transition in the phase from liquid state vapourstate.

holding.The term humidity describes how much water is already in the air; relative to the amount it is capable of holding. Air is saturated when it cannot hold any more water. Imagine it as a sponge, if the sponge held half as much wateras it was capable of holding, it would be 50% saturated. In B] Cooling Efficiency:-

This energy is obtained in an adiabatic process from the air itself. Air entering an evaporative air cooler gives up heat energy to evaporate water.

During this process, the dry bulb temperature of the air passing through the cooler is lowered required o change water from liquid to vapour. Relative Humidity as being 50%

**VII. COST ESTIMATION :-**

**Table No. 1: COST ESTIMATION TABLE**

| Sr. no. | Part name | Quantity | cost/unit | Total cost |
|---|---|---|---|---|
| 1 | Fan blades | 2 | 150 | 300 |
| 2 | Motor | 2 | 600 | 1200 |
| 3 | Switch | 3 | 25 | 75 |
| 4 | Metal sheet | 2 | 600 | 1200 |
| 5 | Door handle | 1 | 40 | 40 |
| 6 | Cooling pad | 3 | 100 | 300 |
| 7 | Steel wire and pipe | 1 | 650+160 | 810 |
| 8 | Angle 25*3 | 4 | 280 | 1120 |
| 9 | M seal | 12 | 120 | 120 |
| 10 | Water pump | 1 | 450 | 450 |
| 11 | Plastic pipe | 1 | 160 | 160 |
| Total Cost | | | | 5615 |

**VIII.PERFORMANCE :-**

OBSERVATIONS**:-**

A] Cooling effect:-

1. Room temperature (Rt) = $34^0$C

2. Cooled air temperature from cooler (Ct) = $24^0$C

Cooling effect: -Rt – Ct = 34 - 24 = $10^0$C

Hence using desert cooler the room temperature is

**Table No. 2: OBSERVATION TABLE**

| Sr. No. | Air Temperatures in $^0$C | | | | Relative humidity (%) | Efficiency (%) |
|---|---|---|---|---|---|---|
| | Outside air temperature | | Temperature after cooler | | | |
| | DBTi | WBTi | DBTo | WBTo | | |
| 1. | 32 | 27 | 28 | 19 | 44% | |

decreased by $10^0$C. Thus the comfortable temperature of $24^0$C can be maintained. Hence we can achieve the cooling effect

Cooling effect: -Rt – Ct = 34 - 24 = $10^0$C

Hence using desert cooler the room temperature decreased by $10^0$C. Thus the comfortable temperature of $24^0$C can be maintained. Hence we can achieve the cooling effect.

## XI RESULT:-

Air gets cooled sufficiently with the cooling efficiency - 80% by the Bi-direction air cooler with increased air flow capacity by employing two fans in single unit and possible in same size of conventional cooler.

## X. CONCLUSION:-

1. Unique design: -

We have given unique design to our cooler. It would befirst time for any cooler to be pentagonal shape. Whenever we design any equipment or component, it is necessary that the equipment/components should conform the quality of performance as well as the quality of design. Our project truly satisfy both the above needs, It increase the air flow capacity in same size of conventional cooler and also gives Aesthetic look.

2. Bi-directional flow of cooled air: -

In common cooler there is only one direction of flow. As the effective surface providing cooled air is only one in conventional cooler, but our cooler offers two effective surfaces providing more air flow capacity of cool air.

3. Flexibility in use: -

As separate switches are provided we can run the cooler as per our convince that is when there is large volume of people we can run two fans simultaneously giving full air flow capacity. While in other case if there are the limited volume of people we can on the particular single fan depending upon side on which the people are present.

4. Wide area cover:-

By modifying the design of conventional cooler, the air flow capacity increase and thus wide area can be cover.

**REFERENCES :-**

**[1]** McClellan C. H., "Evaporative cooling Application",Handbook Sun Manufacturing, Texas,1989.

[2] Watt J.R., "Evaporative Air-conditioning" Hand book, Second Edition,1986

[3] Arora S. C., Domkundwar S.," A course in refrigeration and air conditioning",3rd edition 1985.

[4] Brown.W.K, "Application of Evaporative Cooling Concept to Save Energy while improving the indoreEnvironment",ASAHRE Transaction 97 pt2 , 2013

**M 119**

# Analysis and Simulation of Rigid Flange Coupling

Pooja Jadhav1, Sophiya Pathan1, Sonali Yalamante1, Nidhi kamble1, Kadambari Mali1, Sanjay sutar2
Student, Mechanical Department,
D.K.T.E'S Textile and Engineering Institute, Ichalkaranji, India. 2Assistant Professor, Mechanical Department, D.K.T.E'S Textile and Engineering Institute, Ichalkaranji, India.

**Abstract : In this research we studied rigid flangecoupling. In that, we have performed calculations regards stress, deformation of rigid flange coupling. We analyzed the results by using ANSYS software. The various parameters and component, dimensions. We changed and finally compared the analytical and software results. For performing calculations we used excel sheet and created model of rigid flange coupling in CATIA software and applied boundary condition on it in ANSYS software. At last we summarized all the analytical software based result and suggested modifications in the component dimensions and material.**

## I. Introduction

Coupling is a device used to connect the shafts together for the purpose of transmitting power and torque. Generally, couplings are used for connection of shafts unit that are manufactured separately. Such as motor and generator; electric motor and centrifugal pump etc. Due to the inconvenience in transportation of shaft of greater length, it becomes necessary to join two or more assemble and dismantle for the purpose of repair and alterations .The severe failure due to shearing of bolts head, key head, nuts and other projecting parts may cause accidents. So, it should be covered by giving suitable shape to the flanges or by providing guards. The shaft to be connected by the coupling may have collinear axes, intercepting axes or a parallel axes with a small distance in between them.

The flange coupling is further classified into two types; Rigid and Flexible Coupling .Rigid flange coupling consists of two separate gray cast iron flanges. One keyed to the driving shaft and the other to the driven shaft by means of nuts and bolts arranged on a circle concentric with the axes of the shaft. There are two types of rigid Flange couplings; Protected and Unprotected rigid flange coupling. In a protected rigid flange coupling, a protective circumferential rim covers the nut and bolt head. So in any case of failure of bolts during operation, broken piece of bolt will dash against this rim and eventually fall down, protecting the operator from any possible injuries .In unprotected rigid flange coupling such protective circumferential rim is absent. So, in any case of failure of bolts, it may hit and harm the operate.

In the Microsoft excel sheet, according to the design procedure we prepared the excel sheet. In which materials of rigid flange coupling are vary. And the results obtained from this, are used for selection of dimension of coupling for various application. The ANSYS analysis provides different solutions for same design, helps for better modification, and helps for better use of available material so ANSYS is used for analysis.

## II. Literature Review

1. Sourav Rajgadia, Debayan Das, Pawan Jaiswal [1]: selection of materials: 1) the shaft is subjected to torsional shear stress. So on the basis of strength, plain carbon steel of grade 40c8 ($s_{yt}$ =380 N/mm$^2$) is used as shaft material.2) flanges have complex shape and easiest method of manufacturing is by casting. Grey cast iron FG 200 (Sut =

200N/mm$^2$) is selected as the material for flanges.3) the keys and bolts are subjected to the shear and compressive stresses. On the basis of stress condition, plain carbon steel of grade 30c8 ($s_{yt}$=400 N/mm$^2$) is selected for key and bolts.

2. A. Devraju, K. Pazhanivel [2]: ANSYS is analyzing software which is used for various analysis such as dynamic analysis, structural analysis. The ANSYS analysis provides different solutions for same design, helps for better modification, and helps for better use of available material.
3. Bhandari V.B: [3] & [4] operation of rigid flange coupling and the common applications, advantages and disadvantages of it are mentioned. Materials of coupling parts and their properties are also given specifically.

## III.THEORY

Coupling is a device used to connect the shafts together for the purpose of transmitting power and torque. Generally, couplings are used for connection of shafts unit that are manufactured separately. Such as motor and generator; electric motor and centrifugal pump etc.

- **Types of couplings:**
  1. Sleeve coupling:
  2. Bush pin Type flange coupling:
  3. Flexible coupling
  4. flange coupling

- **Rigid Flange coupling:**

The rigid flange coupling is consist of following parts:

- Flange
- Hub
- Nuts, bolts, key.

In this coupling two shafts are connected by flanges with the help of nut and bolt.All components of rigid flange coupling are subjected to shear stress, twisting moment, crushing stress and bending stress in working condition.

- **Applications:**
  - To provide connection of shafts of units made separately
  - To allow misalignment of the shafts or to introduce mechanical flexibility.
  - To reduce the transmission of shock loads
  - To introduce protection against overloads.
  - To alter the vibration characteristics

**Advantages:**

- Torsionally stiff
- No lubrication or maintenance
- Good vibration damping and shock absorbing qualities
- Less expensive than metallic couplings
- More misalignment allowable than most metallic couplings

**Limitations:**

- Sensitive to chemicals and high temperatures
- Usually not torsionally stiff enough for positive displacement
- Larger in outside diameter than metallic coupling
- Difficult to balance as an assembly

- **Material And Its Properties:**

Rigid flange is usually manufactured by casting as it consists of projection and recess. The commonly used material for flange coupling is grey cast iron which is characterized by graphitic microstructure causing fracture of the material to have a grey appearance. It is one of the most commonly used form of cast iron and the widely used cast material based on casting properties. Most alloys of Ironcontain2.5-4% carbon, 1-3% silicon and the rest is iron by weight proportion. It has less tensile strength and shock resistance as compared to its compressive strength. Its mechanical properties are controlled by the size and morphology of the graphite flakes which deflect a passing crack and initiate counter less new cracks as the material breaks due to which it has good wear resistance and

damping capacity. It also experiences less solidification shrinkage than other cast iron that does not form a graphitic microstructure during casting process. The silicon promotes good corrosion resistance and increase fluidity while casting. It also offers good weldability.

| Item names | Material used |
|---|---|
| Shaft | Plain carbon steel 40C8 |
| Flange | Grey cast iron |
| Key,nuts,bolts | Plain carbon steel 30C8 |

## IV.DESIGN OF RIGID FLANGE COUPLING

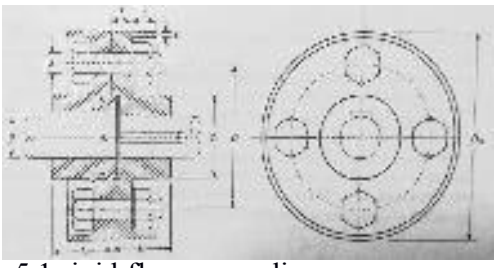

Fig 5.1 rigid flange coupling

Symbols used in the design procedure:-

P = Power to be transmitted
Mt = Torque
τ = Shear stress
d = Shaft diameter
d2 = Pitch circle diameter of bolt
t = Thickness of flange
d1 = Outside diameter of hub.
d3 = Outside diameter of flange.
$l_h$ = Length of the hub
db= diameter of bolt
n = No. of bolts
b, h, l = breath, height and length of key resp.

Where,
d= diameter of shaft

D= pitch circle diameter of bolts
=3d

$d_h$=outside diameter of hub
=2d

$l_h$=length of hub or effective length of key
=1.5d

t=thickness of flanges
=0.5d

t1=thickness of protecting rim
=0.25d

Dr=diameter of spigot and recess
=1.5d

Do=outside diameter of flange
=(4d+2t1)

- **diameter of shaft**

$Mt = 60*10^6 (KW)/2*\pi*n$

Considering shear failure,
$\tau = 16\ Mt/\ \pi d^3$

- **Dimensions of flanges**

$d_h = 2*d$

$l_h = 1.5*d$

$D = 3*d$

$t = 0.5*d$

$t_1 = 0.25*d$

$d_r = 1.5*d$

$D_o = (4d+2t_1)$

The hub of the flange is treated as hollow cylinder.

$j = \pi(dh^4 - d^4)$

r =dh/2

The torsional shear stress in the hub,
1. = mt *r/ j

The shear stress in the flange,
iv) = 2 Mt/ π* $d_h^2$*t

- **Diameter of bolts**

According to shaft diameter select number of bolts.The diameter of bolt is given by,

$d_1^2$=8 Mt/π*D*n*ʊ

Compressive stress in bolts,

бc = 2 Mt/n*$d_1$*t*D

- **Dimensions of key**

The key has square cross-section
b=h=d/4

The length of key is,
l= $l_h$

Checking for shear stress,

ʊ = 4*Mt/d*h*l

Checking for compressive stress,

бc = 4 Mt/ dhl

- **METHODOLOGY:**

First we prepared the CATIA model of rigid flange coupling. Rigid Flange coupling consist of two flanges, bolts, nuts and key. We have assigned the proper dimensions and material properties of these parts in CATIA. The material selected for flanges is gray cast iron, for shaft plain carbon steel of grade 40C8 and for key, bolt and nut plain carbon steel of grade 30C8.

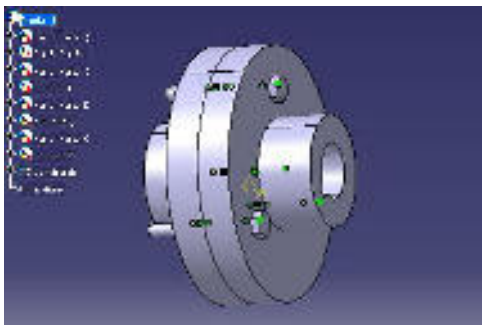

Fig 5.2 Rigid flange coupling

## V. RESULT AND DISCUSSION

- **Excel Sheet Calculations:**

| P(KW) | 15 | 15 |
|---|---|---|
| N (RPM) | 720 | 720 |
| FOS (shaft, key, bolt) | 3 | 3 |
| FOS (flange) | 6 | 6 |
| Syt (N/mm$^2$) | 400 | 380 |
| Sut (N/mm$^2$) | 200 | 200 |
| бt (N/mm$^2$) (shaft) | 133.33 | 126.67 |
| бc (N/mm$^2$) (shaft) | 200 | 190S |
| ʊ (N/mm$^2$)(flange) | 16.67 | 16.67 |
| Mt (N.mm) | 198863.63 | 198864 |
| d(mm) | 25 | 26 |
| dh(mm) | 50 | 52 |
| lh(mm) | 40 | 40 |

| | | |
|---|---|---|
| D(mm) | 75 | 78 |
| t(mm) | 15 | 15 |
| $t_1$(mm) | 7 | 7 |
| dr(mm) | 40 | 40 |
| Do(mm) | 114 | 118 |
| j($mm^4$) | 575474.33 | 673224 |
| r(mm) | 25 | 26 |
| τ ($N/mm^2$) hub | 8.63 | 7.68 |
| n | 3 | 3 |
| $d_1$(mm) | 6 | 6 |
| $\sigma_c$ ($N/mm^2$) checking of bolt | 19.64 | 18.88 |
| h&b(mm) | 7 | 7 |
| L (mm) | 40 | 40 |

α. **Graph:**
Material vs stress
4.axis – materials
5.axis- shear stresses

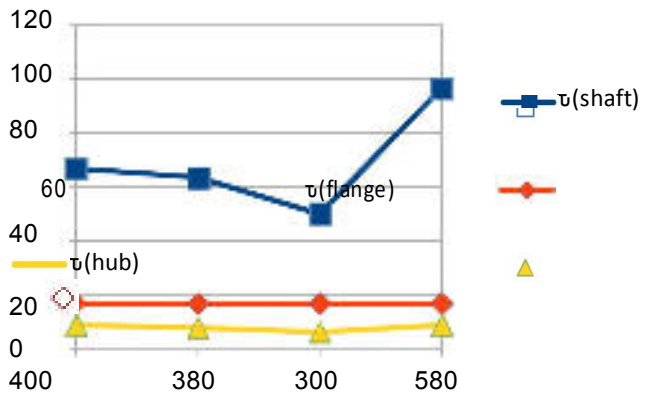


## VI. SIMULATION OF RIGID FLANGE COUPLING

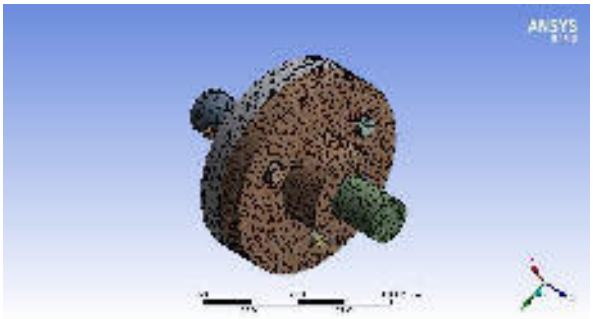


Fig.7.1. Rigid flange coupling in ANSYS

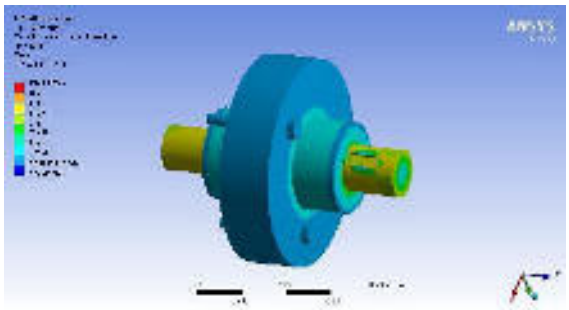

Fig 7.2. Equivalent stress analysis

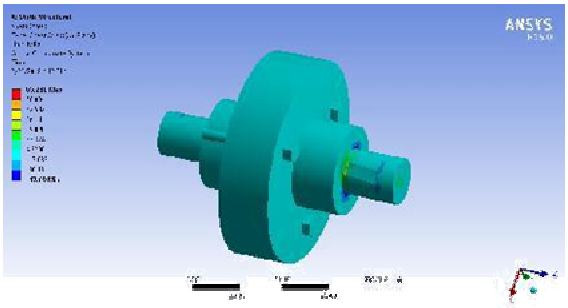


Fig 7.3. Shear stress analysis

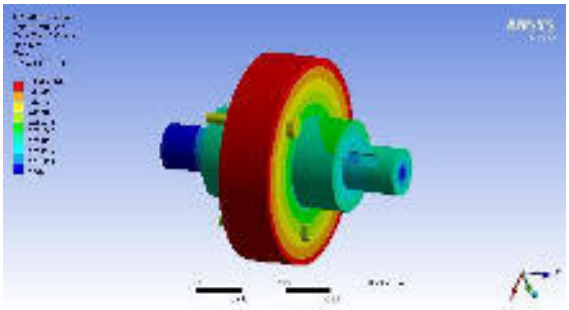

Fig 7.4 .Total deformation

| PARAMETER | EXCEL CALCULATIONS | ANSYS ANALYSIS |
|---|---|---|
| EQUIVALENT STRESS | 200 | 192.67 |
| SHEAR STRESS | 66.66 | 65.23 |

These are the results of deformation, equivalent stress and shear stress calculations of rigid flange coupling in excel sheet and ANSYS software.

## VII.CONCLUSIONS

- Torque of 198863.63 N.mm is applied to the one shaft and another shaft is assumed fix.
- It is analyzed in ANSYS ( workbench 15.0)
- According to this analysis it is concluded that stresses induced in rigid flange coupling at this torque are within the limit of permissible stresses.
- Hence the dimensions obtained from excel sheet are acceptable therefore design is safe.

## REFERENCES

[1] Sourav Rajgadia,Debayan Das,Pawan Jaiswal "Design AndStress Analysis Of Rigid Flange Coupling Using FEM"

[2] Devraju, K. Pazhanivel "A Study On Stress Analysis For Design Of Pressure Vessel"

[3] V.B.Bhandari, "Introduction to Machine Design" Page No. 287-298, 4.20 & 4.28

[4] Bhandari V.B. (2001), Design of machine element, 3rd Edition. 368-369

**M120**

# Reverse Engineering Approach to Develop Patient Specific Implant Models

Shreyas Bhosale
PG student, Department of Mechanical Engineering,
Textile and Engineering Institute,
Ichalkaranji, India.

Prof. (Dr.) V. D. Shinde
Professor, Department of Mechanical Engineering,
Textile and Engineering Institute,
Ichalkaranji, India.

**Abstract : Now days, most of the old people are suffering from bone or joint wear problems due to ageing of load bearing joints and their degenerative nature. This causes pain while functioning the joint and joints become more prone to ailments, the primary clinical treatments and medicines only reduce pain temporary. The replacement of damaged bone joint with artificial medical implant joint is the most suitable and long-term solution for these problems, although the patient specific medical implant provides more body adaptable conditions and minimum cure time with less pain. The patient specific medical implant is developed according to the particular person's body geometry and medical conditions, for this reverse engineering approach will be used. The Computed Tomography (CT) scan system is used as data acquisition for generating joint bone geometry data in Digital Imaging and Communications in Medicine (DICOM) format. Then the open source segmenting software such as 3D Slicer and online conversion facilities are used to convert DICOM data into CAD accessible STL file of bone joint model. Then this STL file of bone joint model is used to develop 3D medical implant model by using Solidworks and Meshlab software. Then the STL file of developed medical implant model will be used for rapid prototyping to make 3D model of implant.**

***Keywords*** *: Medical implant, CT (Computed Tomography), DICOM (Digital Imaging and Communications in Medicine), data conversion, STL (Stereolithography), NRRD (Nearly Raw Raster Data), Surface filtering, CAD modelling, Fused Deposition Modelling.*

## Introduction

Human body has degenerative joints and it ages, load bearing joint wears. It causes pain at joints due to wear and also the joints become more prone to ailments. It is avoided by implanting the artificial joint into body by surgery, which can perform with appropriate host response.The standard metal implants consist of sterilized biomaterial screws, rods, strips, which are universally applicable for any person to cure miner bone crack problems [1-2]. There are also some standard metal implants for particular type of age, weight patients. The patient specific implants are used to cure major joint problems. The metal implants are made of actual bone geometry specification of the particular patients [3]. Therefore, the body and adjacent tissues, mussels easily accept the implant with less pain and recovers fast.It has different parameters for different patients, therefore it is necessary to generate the real data of particular patient, whose implant has to be done. The reverse engineering approach can be applied to gather the data related to implant [7]. The medical scanning system such as Computer Tomography (CT), Magnetic Resonance Image (MRI), micro CT are used for data acquisition of joint [4]. The CT scanned data gives brief information related to bone geometry. Then the scanned data is converted into the engineering CAD accessible format, which can be refined and rendered in the CAD software. Then this CAD models are used for further construction or fabrication of joint implant.

## Methodology

The CT scanned data in the DICOM format is require to collect and convert in STL format. For the data acquisition CT scan is preferred, it generates the DICOM format data of bone joint. Then this data is converted into CAD software accessible STL format though segmenting and geometry generating software, then the STL bone model is edited in Solidworks software to implant model for particular patient.

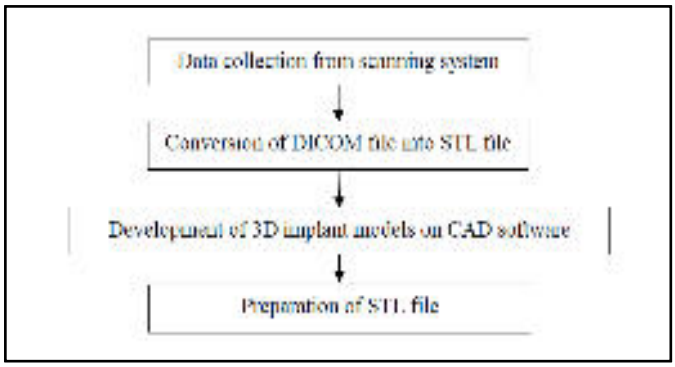


Fig. 1. Flow chart for methodology of implementation.

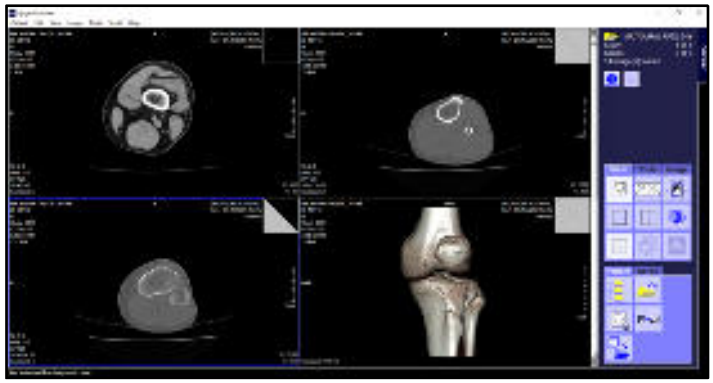

Fig. 2. CT scanned knee joint in DICOM viewer software.

## Medical data aquisition

CT and MRI scanning systems can be used to generate the bone geometry data. MRI scanning is used for detect and study soft body tissues such as nerves, brain tissues. The CT scanning has ability to detect hard tissues such as bone; therefore, CT scanning is preferred as data acquisition technique for implant developing [5-6].

### CT scanning

Computerized Tomography (CT) scan combines data from several X-rays to produce a detailed image of structures inside the body. CT scanner emits series of narrow beams through all directions. The scanning system uses computer processed combination of many X-rays taken from different angles of a specific area of interest. It gives 2D image files in DICOM (Digital Imaging and Communications in Medicine) format. The set of files consists number of images taken from all directions. By combining these images, the virtual 3D model of the particular body area can be formed.

The CT scanned data of knee, hip and shoulder in the DICOM file format is collected from Siddhagiri Hospital and Research Centre, Kaneri, Kolhapur.

## Digital Imaging and Communications in Medicine (DICOM) data

Digital Imaging and Communications in Medicine is a standard for handling, storing and transmitting information in medical imaging. It is used to communicate between medical devices such as scanning system, diagnosis software, analysis software and devices. The DICOM files can be collected from radiography, sonography, CT scanning, MRI scanning systems and used for study and 3D visualization on computer software. Fig. 2 shows the Syngo Fastview (DICOM file viewer) window of knee joint CT scanned DICOM data.

## Medical data processing

DICOM files can be converted with the help of some slicing open source softwares and medical data processing websites. The 3D Slicer 4.7.0 is a open source software which is used to convert DICOM files into NRRD (Nearly Raw Raster Data) files. www.embodi3d.com is the medical website, which provides online conversion of NRRD files into STL files. Fig. 3. shows the steps in process.


Fig. 3. Procedure of DICOM to STL conversion.

## DICOM toNRRD Conversion

Nearly Raw Raster Data (NRRD) is a file format for storing, transforming and visualizing medical image data in single file. These are anonymized and contains no sensitive patient information. The CT scanned DICON files contains different tissues, skin and bone models.

When the DICOM files are opened in 3D Slicer 4.7.0 software, the software separates the files such as skin, bone, soft tissues with patient information. Then the particular bone model is selected to convert into NRRD format, then the converted NRRD files are saved. The features such as scaler

volume examination and multivolume importer examination plugins can be used to obtain accurate bone data. The Fig. 4 shows the 3D Slicer software window after loading DICOM files of knee joint.

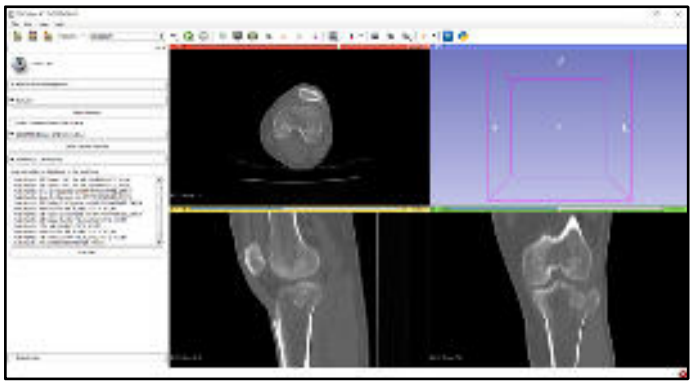

Fig. 4. Conversion of DICOM file to NRRD file of knee joint in 3D Slicer software.

## NRRD to STL conversion

The NRRD files of bone models is then uploaded on democratiz3D application workbench inwww.embodi3d.comwebsite [10]. Then the website directly produces converted STL file of given NRRD file. The website has facilities of selecting bone or skin or tissue model. It is very easy process to convert medical data into CAD accessible STL files within less time.

## Development of 3d implant model

The converted STL file of bone models used for developing of medical implants. The developments are to be done on CAD software such as SolidWorks. When the STL file of bone models are opened in SolidWorks software, it opened in the graphical model format due to the model has large number of faces. The graphical model cannot be edited in software, the model with less than 20,000 faces can be only edited in software.

## Face reduction of STL files

To reduce the faces of bone models the MeshLab 2016.12 software is used. The surface filtration method is used to reduce faces. The quadric edge collapse decimation function in software is used to reduce faces below 20,000. Then the reduced face model is exported in STL format for further development. The face reduction process is done on knee joint model as shown in Fig. 5.

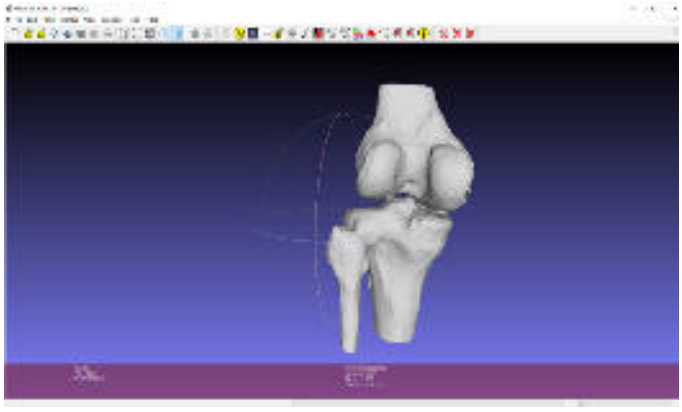

Fig. 5. Face reduction of knee model in MeshLab software.

Table I. shows the properties of files after and before face reduction of STL model of joints. The reduction in faces ultimately reduces the size of the file. Then these files can be easily editable in SolidWorks software.

TABLE I. PROPERTIES OF REDUCED FACES FILES IN MESHLAB SOFTWARE

| Type of Joint | STL file (converted on website) | | Filtered STL file (reduced faces) | |
|---|---|---|---|---|
| | Number of faces | Size of fileKB | Number of faces | Size of fileKB |
| Knee Joint | 372436 | 18186 | 19500 | 953 |
| Hip Joint | 622632 | 30403 | 19000 | 928 |
| Shoulder Joint | 664028 | 32424 | 18500 | 904 |

B. *Developmentof Implant*

The reduced face bone model is editable in CAD software, but it has surface body format that is the model is hallow from inside. At the beginning, the model is reduced to required implant geometry that is the extra and not required parts of body are trimmed. This will reduce the extra geometrical body of bone which results in reduced numbers of faces and reduced size.

Then this surface model is made solid model by using open source softwares such as Meshmixer or FreeCAD, the software converts the model in solid form. Then the model can be used for further developments. The surface refinement is done specially for knee model because it requires similar shape for proper functioning. These models of knee joint, hip joint and shoulder joint is then edited in SolidWorks software. The various extruder cuts are given to produce implant geometry from bone model. The knee femoral and tibial component are given with studs to install and hold implant in femur and tibia respectively [8-9]. The filet is provided at all

edged of implant to avoid damage to adjacent body parts while working by sharp edges. Fig. 6. shows the developed models of knee joint implants.

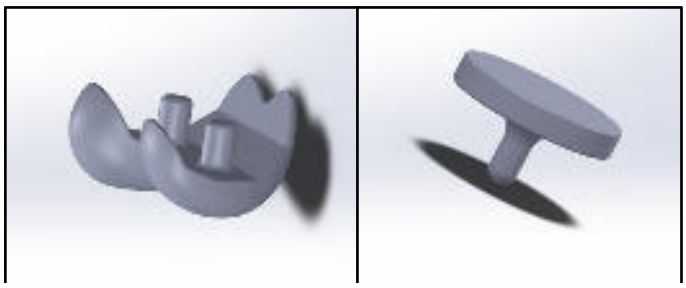

Fig. 6. Developed knee joint implant model in Solidworks software.

## Discussion and conclusions

Reverse engineering is most suitable and promising method to develop patient specific implant. The successful, quick and accurate data conversion is possible with 3D slicer and online conversion facility [10], but the preparing of converted STL file to edit in CAD software is difficult. The face reduction and surface filtering process is required and it produce data loss. Therefore, in some cases such as knee implant, it must be optimized to retain the geometry, shape characteristics. The softwares such as Mimics and 3matics are used worldwide for accurate and effective DICOM data conversion and modelling, but these are very expensive softwares. The use of the open source softwares and online data conversion facilities are suitable for study and research work.

Acknowledgment

I am grateful to my project guide Prof. (Dr.) V. D. Shinde, Department of Mechanical Engineering for providing unreserved guidance, inspiring discussion and constant supervision throughout this research work. Special thanks to Mr. Mahesh Nimbalkar (CT Scan Technician), Siddhagiri Hospital and Research Center, Kaneri, Kolhapur for providing CT scan data and information.

## References

[1] Soumya Nag, Rajarshi Banerjee, "Fundamentals of Medical Implant Materials", Materials for Medical Devices, Vol.23, 2012, pp.1- 17.

[2]Mythili Prakasam, Janis Locs, Kristine Salma-Ancane, Dagnija Loca, Alain Largeteau, Liga Berzina-Cimdina, "Biodegradable Materials and Metallic Implants—A Review", Journal of Functional Biomaterials, Vol.8, 2017, pp.1-15.

[3] Nitin Borode, Tushar Deshmukh, Nilesh Pohokar, "Review of Custom Made Impant", International Journal for Research in Applied Science and Engineering Technology, Vol.2, ISSN:2321-9653, December 2014, pp.292-299.

[4] V. N. Chougule, A. V. Mulay, B. B. Ahuja, "Development of patient specific implants for Minimum Invasive Spine Surgeries (MISS) from non-invasive imaging techniques by reverse engineering and additive manufacturing techniques", Procedia Engineering 97, 2014, pp.212 – 219.

[5] Yu-qin Pan, Ruan Zheng, Fa-bing Liu, Wang Jing, Chen Yong, Xue-yan Liang, Wu Bing, "The use of CT scan and stereo lithography apparatus technologies in a canine individualized rib prosthesis", International Journal of Surgery, Vol.12, 2014, pp.71-75.

[6] W. Sun, B. Starly, J. Nam, A. Darling, "Bio-CAD modeling and its applications in computer-aided tissue engineering", Computer-Aided Design, Vol.37, 2005, pp.1097–1114.

[7] Manish D. Toprakwar, Rahul M. Sherekar, Swapnil S. Bele, Pankaj D. Morey, "An Integrated Approach Of Reverse Engineering For Dimensional & Error Analysis Of Customized Humerus Bone Implant", International Journal of Research In Science & Engineering, Vol.1, Issue:3, e-ISSN: 2394-8299, pp.130-136.

[8]John Slamin, Brian Parsley, "Evolution of customization design for total knee arthroplasty", Customization In Arthroplasty, Vol.5, 2012, pp.:290–295.

[9] Xinyu Li, Changjiang Wang, Yuan Guo, Weiyi Chen, "An Approach to Developing Customized Total Knee Replacement Implants", Journal of Healthcare Engineering, Volume 2017, pp.1-8.

[10] Online NRRD to STL file conversion website.

Available: https://www.embodi3d.com

**M 126**

# Development,Testing and Analysis of Multi-Link (5-Dimensional) Coupling for Parallel and Angular Offsets

Mr. V. J. Patil1, Prof. P. N. Gore2,*
1M.E. Student, D.K.T.E, ICHALKARANJI,
2Assosiate Professor, D.K.T.E., ICHALKARANJI, M.S., INDIA
*Corresponding Author: purushottamgore@yahoo.com, 9922810790
vjp5067@gmail.com , 08698356108

**Abstract:Couplings are designed to accommodate axial, angular or parallel shaft misalignmentsalone. However, in case of few applications it is requiredto accomplishall possible shaft misalignments. Theside loads induced on shaft limitscoupling capacity and transmission efficiency. If side loads exceeds may cause vibrations, life reduction or failure of vital machine components such as bearings, motors, etc.Presently Oldham's coupling and Universal joints are used for parallel offset power transmission or angular offset transmission. These joints have limitations on maximum offset distance, angle, speed and result in vibrations and low efficiency.In this present work multi-link (5-Dimentional) coupling was developed and manufactured. It comprises of kinematic design of linkages set to deliver power transmission for parallel offset (10 to 40 mm) and angular offset (1 to 4 degrees) on either side of the input shaft. Also, strength analysis and validated using ANSYS for various components. The experimentation were carried out by preparing test matrix for input parameters like drive speed (600 to 1200rpm) and applied load (500 to 2000 gm in four steps). Tests were conducted for two different cases like Parallel offset (10, 20, 30 & 40 mm of mean shaft position) & Angular offset ($1^0$, $2^0$, $3^0$&$4^0$).The performance parameters like torque, power and efficiency wereinvestigated. It was observed that design was safe with achieving goals of parallel as well as angular misalignments within specified range. Also, experimental set-up was sturdy to transmit all loads under all working speed for given parallel as well angular offsets. It was noted that torque, power and transmission efficiency were not affected significantly with new developed multi-link (5-Dimensional) coupling for parallel and angular offsets. This design-developed multi-link(5-Dimensional) coupling for parallel and angular offsets may bring promising substitute to typical (Ordinary-Oldham's coupling and Universal joints) couplings.**

***Keywords: Multi-Link (5-Dimensional) Coupling, Parallel and Angular Offsets,Efficiency***

## 1. Introduction:

Couplings a power transmitting device are used to connect mechanical driven elements. The majority of driven elements include gear reducers, lead screws, and a host of other components, are driven by shafting that is supported by multiple bearings. This allows for shafting to be held extremely straight and rigid while rotating, avoiding any possible balancing and support problems. Because of this rigid support, it is virtually impossible to avoid slight misalignments between a driving and driven shaft when they are connected. Restoring forces that occur as the two coupled shafts compete to maintain their original positions can put unwanted strain on shaft bearings, causing them to wear out prematurely. Additional axial loads are also placed on the bearings as thermal growth occurs in shafting during operation

### 1.1 Need of Couplings

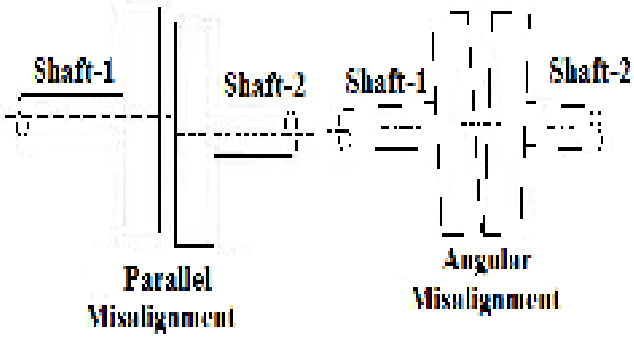


**Fig. 1: Types of Misalignments [1]**

The primary role of a power transmission coupling is to transmit torque from an input shaft to an output shaft at a given shaft speed where necessary, to accommodate shaft misalignment. Misalignment is the result of many factors including installation errors and tolerance variations. Shaft misalignment can increase the axial and radial forces exerted on the coupling. In misaligned applications, undesirable side loads are usually introduced by the coupling. These side loads result from dynamic coupling behavior, frictional loads and loads caused by flexing or compressing coupling components. The undesirable results include:

1. Excessive forces and heat on system bearings which reduce machine life.
2. Increased system vibration and noise which reduce system accuracy and adversely affects on equipment operation.
3. May breakdown during operations and cause damage to operation or human being.
4. Continuous additions to maintaince costs.

## 2. Alternative Solution- Five Dimensional Coupling

Five Dimensional Couplings are developed to accommodate angular and parallel shaft displacements. For some applications, however, the operational conditions require all possible shaft misalignments. If these shaft misalignments exceed the limit of the selected coupling capacity, excessSide loads are introduced into the equipment which can cause vibrations, life reduction or failure of vital machine components such as bearings, motors, etc.

The Five dimensional couplings are a modification of the Inline coupling, designed to accommodate five degrees of shaft misalignments. These misalignments include two parallel misalignments and three angular misalignments. This coupling allows easy adjustment to any possible misaligned shaft position without imposing heavy side loads on shafts, bearings or other machine equipment. Five Dimensional Couplings offer large shaft misalignment capabilities and constant angular velocity.

The solution to the above problem is that this coupling gives constant transmission of torque and angular velocity. The main features of the coupling being:

1. Minimize or even eliminate side loads.
2. Higher shaft misalignment capabilities.
3. Greater drive accuracy.

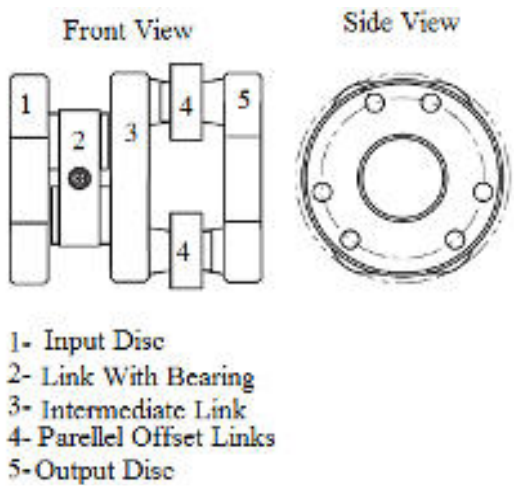


**Fig. 2: Five Dimensional Coupling [2]**

- **Merits**

1. **Step-less variation of parallel offset:** Any displacement between 0 to 60 mm can be obtained.Hence the drive provides flexibility in operation and setting as prime mover location can be varies as per space available.
2. **Wide range of angular displacement:** The wide range of angular displacement $0^0$ to $5^0$ enables to get vibration free power transmission at high speed. This will be especially useful in spring making machinery, textile machinery, printing machinery and automatic transfer lines.
3. **Compact size:** The size of the gear less variable speed reducer is very compact; which makes it low weight and occupies less space in any drive.

## 3. Design of Components

### 3.1 Selection of Drive Motor

Type: - Single Phase Ac Motor.
Power: - 150 Watts
Voltage: - 230 Volts, 50 Hz
Speed – 1440 rpm

$T = (P \times 60) / 2\pi N$

= 0.955 N.m

Selection of material

| Designation | Ultimate Tensile Strength $N/mm^2$ | Yield Strength $N/mm^2$ |
|---|---|---|
| En 24 | 800 | 680 |

As per ASME code,
$\tau_{Allowable}$= 0.18 Sut
= 0.18 x 800
= 144 $N/mm^2$

$\tau_{Allowable}$= 0.18 Syt
= 0.3 x 680
= 204 $N/mm^2$
Taking minimum value
Therefore $\tau_{Allowable}$= 144 $N/mm^2$

**Design of Input Shaft**

The forces applied on shaft are weights of components.

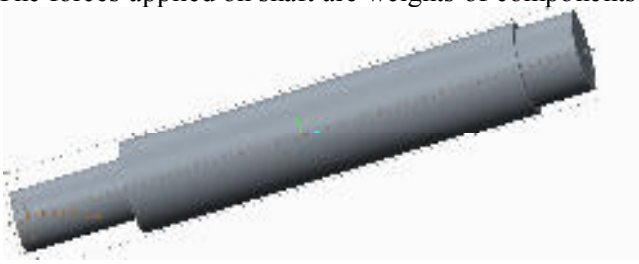

Maximum bending moment of shaft = 495 Nmm

$Te = \sqrt{(M^2 + T^2)}$
$= \sqrt{(495^2 + 955^2)}$
= 1075.66 Nmm
The minimum diameter of shaft is 16 mm.
$Te = \pi d^3\tau / 16$
$\tau$ = 0.634 $N/mm^2$
$\tau < \tau_{Allowable}$
Therefore design is safe.

**Design of Output Shaft**

The forces applied on shaft are weights of components.Maximum weight applied at the time of testing is 5 kg.

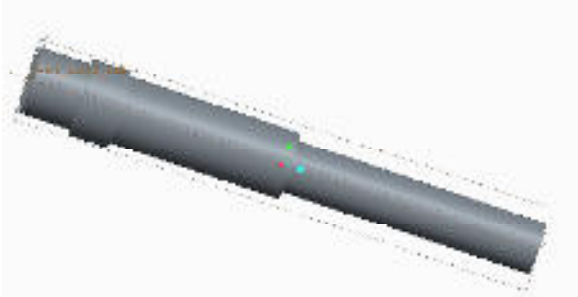

Maximum bending moment of shaft = 495 Nmm

$Te = \sqrt{(M^2 + T^2)}$
$= \sqrt{(2403.45^2 + 955^2)}$
= 2586.23 N mm
The minimum diameter of shaft is 20 mm.
$Te = \pi d^3\tau / 16$
$\tau$ = 32.92 $N/mm^2$
$\tau < \tau_{Allowable}$
Therefore design is safe.

**Design of Driver Disc**

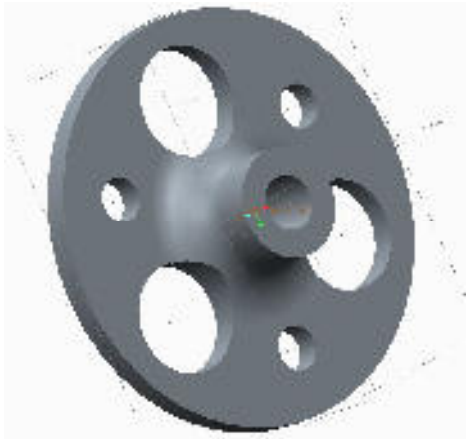

Consider $D_o$ = 40mm and $D_i$ = 20mm
$T = \pi\tau [(D_o^4 - D_i^4)/D_o] / 16$
$\tau$ = 0.081 $N/mm^2$
$\tau < \tau_{Allowable}$
Therefore design is safe.

**Design of Pin**
The pitch circle diameter of pin holes is 110mm.
Diameter of pin is 16mm.
Tangential force = $F = T/(D_p/2)$
= 17.36N
Shear stress = $\tau = F/A$ = 0.086 $N/mm^2$

$\tau < \tau_{Allowable}$

Therefore design is safe.

**Design of Input Link**

Torque = Force x Radius
F = T/R = 22.47 N
$\tau$ = F / A = 0.204 N/mm$^2$

$\tau < \tau_{Allowable}$
Therefore design is safe.

## 4. Results and Discussions

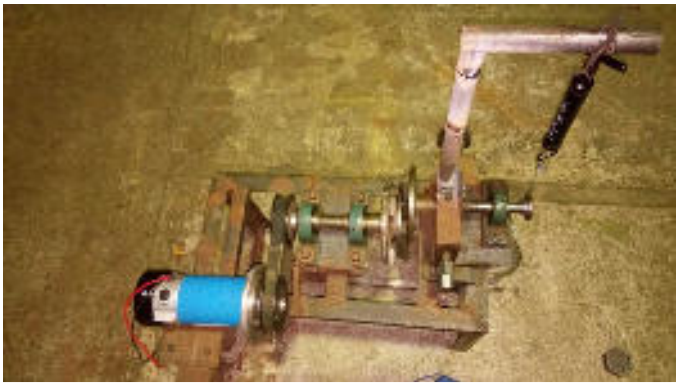

**Fig. 3. Experimental Set-up for misalignment**

**Parallel Offset**
**1. For 900 RPM**

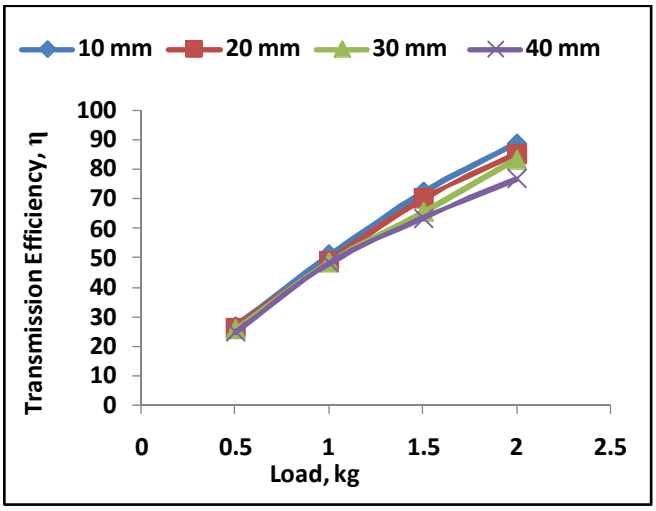


**2. For 800 RPM**

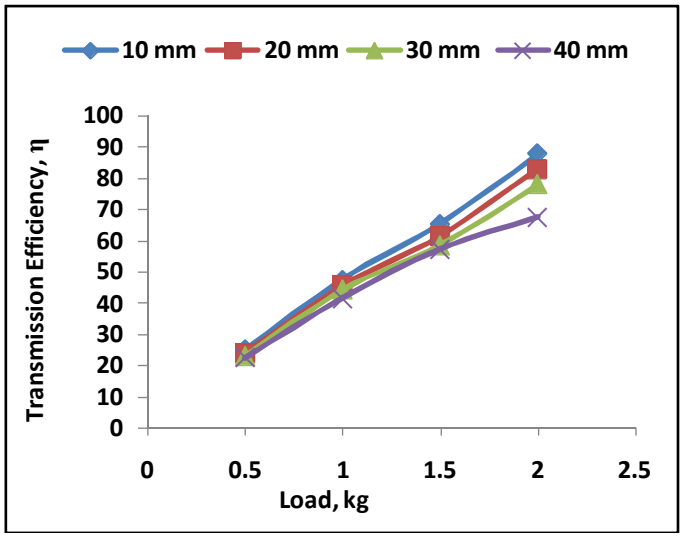


**3. For 700 RPM**

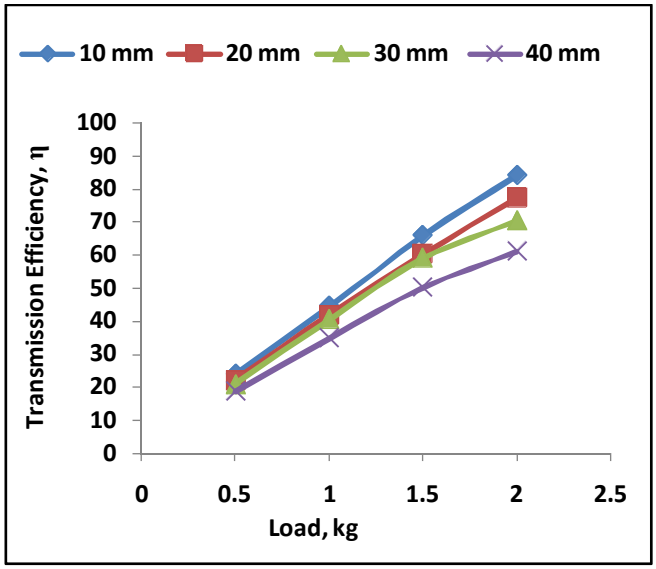


**Angular Offset**
**1.For 900 RPM**

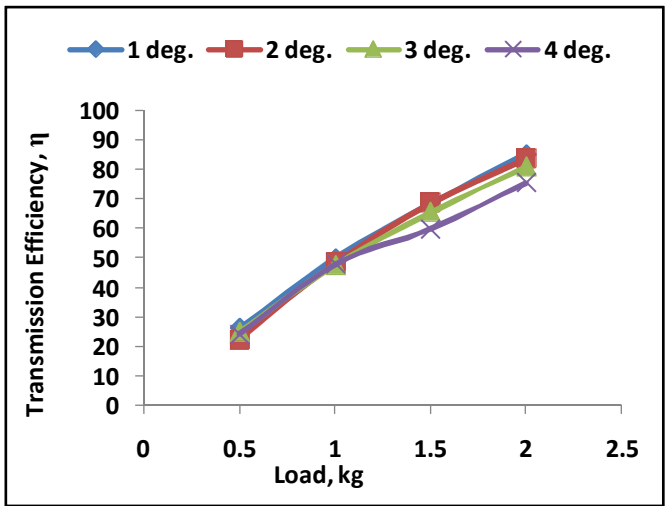

2. **For 800 RPM**

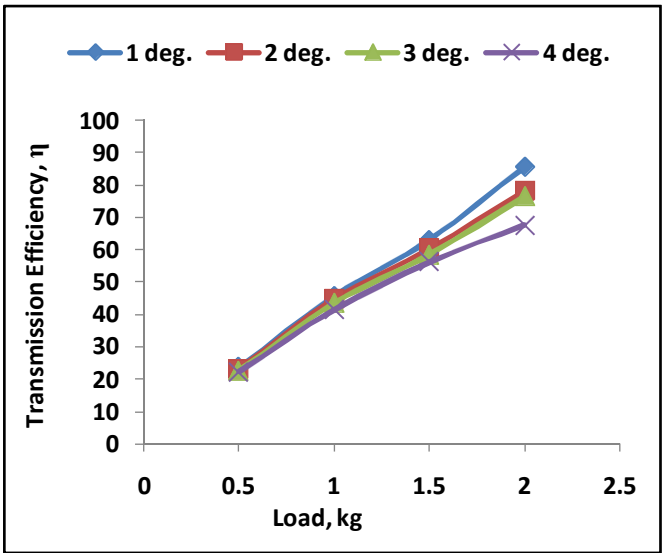


3. **For 700 RPM**

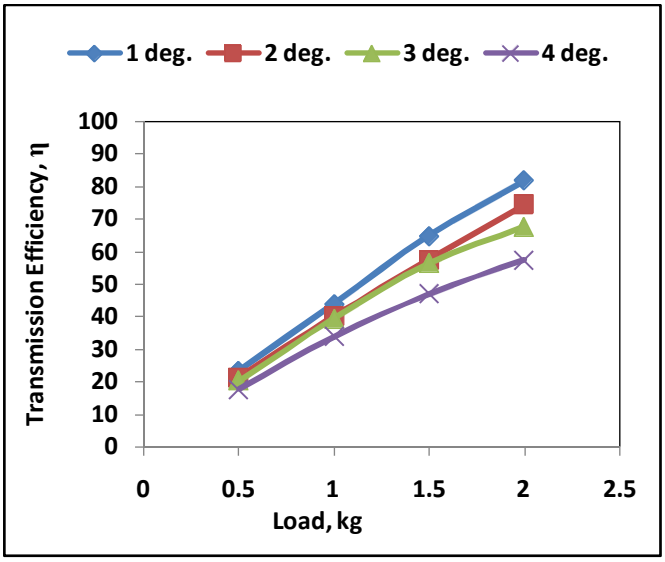


**Comparative speed at 10 mm**

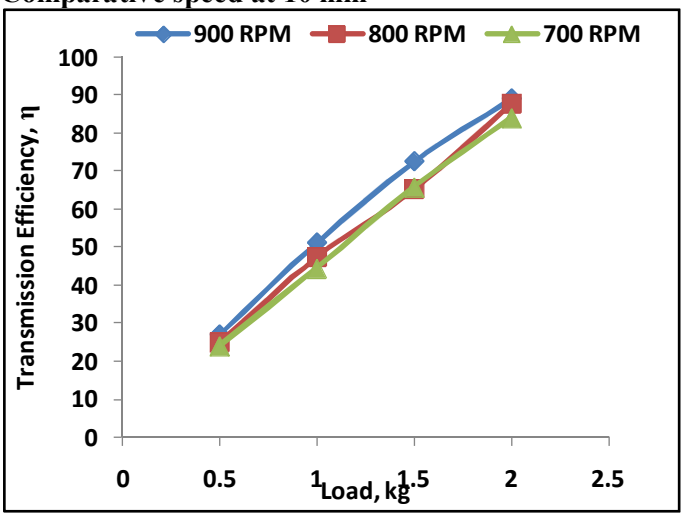


**Comparative speed at 1 degree**

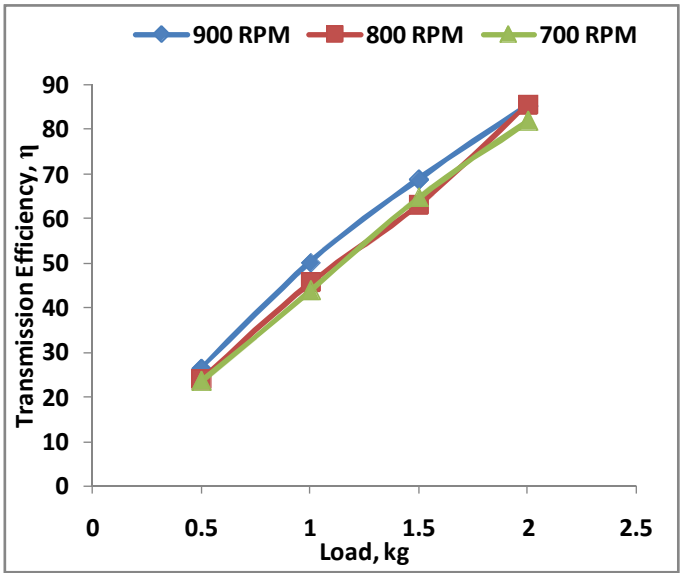


**For parallel offset charts**

Variation of efficiency for different angular offsetangles is shown in figures. It is seen that there is marginaldrop in efficiency with increase in angular offset thus itcan be safely stated that coupling offers maximumefficiency at minimum parallel offset.

Variation of power output for different angularoffset angles is shown in figures. It is seen that there ismarginal drop in output power with increase in angularoffset thus it can be safely stated that coupling offersmaximum power output at minimum parallel offset.

Variation of torque for different angular offset angles is shown in figures. It is observed that the torquevalues remain almost same for all angular offset settings.

**For angular offset charts**

Variation of torque for different angular offset angles is shown in figures. It is observed that the torquevalues remain almost same for all angular offset settings.

Variation of power output for different angularoffset angles is shown in figures. It is seen that there ismarginal drop in output power with increase in angularoffset thus it can be safely stated that coupling offersmaximum power output at minimum angular offset.

Variation of efficiency for different angular offsetangles is shown in figures. It is seen that there is marginaldrop in efficiency with increase in angular offset thus itcan be safely stated that coupling offers maximumefficiency at minimum angular offset.

**Conclusion-**

From this dissertation work it is conclude that the coupling efficiency is 89.00% at 10 mm offset. For the same speed, theefficiency decreases up to 27.00%. Therefore, at the higheroffset efficiency decreases due to increased vibrations and increasedcentrifugal force.Five dimensional Couplings are designed to accommodate fivedegrees of shaft misalignment. This coupling allows easy adjustmentto any possible misaligned shaft position without imposingheavy side loads on shafts, bearings or other machineequipment. Five dimensional Couplings offer large shaft misalignmentcapabilities. The coupling provides a smooth flowof power for maximum product quality.

## REFERENCES


[1] Tae-Wan Ku , Lee-Ho Kim , Beom-Soo Kang , Multi-stage cold forging and experimental investigation for the outer race of constant velocity joints, Materials and Design 49 (2013) 368–385

[2] Chul-Hee Lee 1, AndreasA.Polycarpou, A phenomenological friction model of tripod constant velocity (CV) joints, Tribology International 43 (2010) 844–858

[3] K.S. Park , B.J. Kim, Y.H. Moon, Development of a ball groove measuring system for forged outer race constant velocity (CV) joints, Journal of Materials Processing Technology 191 (2007) 145

[4] Z.Gronostajski_, M. Hawryluk_, M. Kaszuba, A. Niechajowicz, S. Polak, S. Walczak, D. Jabłonski, Optimization For Forging Constant Velocity Joint Casings Archives of Metallurgy And Materials, Volume 56,Issue 2, 10.2478/V10172-011-0059-z, 2011

[5] Jian Mao,1 YuanxinLuo, 2 and Jun Liu3, Research Article Dynamics Performance and Abrasive Wear of the Automotive Drive Shaft, Hindawi Publishing Corporation Advances in Mechanical Engineering Volume 2014, Article ID 713824, 9 pages

[6] Katsumi Watanabe, Takashi Matsuura, Kinematic Analyses of Rzeppa Constant Velocity Joint by Means of Bilaterally Symmetrical Circular-Arc-Bar Joint

[7] Rahul N. Yerrawar, VinodB.Tungikar, ShravanH.Gawande, Finite Element Analysis of Dynamic Damper for CV Joint, Energy and Power Engineering, 2012, 4, 241-247

[8] M. M. Mohammadi And 2m.H.Sadeghi., Numerical And Experimental Investigation Of Forging Process Of A Cv Joint Outer Race

[9] International Journal of Research and Reviews in Applied SciencesISSN: 2076-734X, EISSN: 2076-7366 Volume 2, Issue 1(January 2010)

[10] MajidYaghoubi*, Ali Jafary, SeyedSaeidMohtasebi, Design, simulation and evaluation of a new universal joint with intersecting angle up to 100 degrees for farm machineries, AJAE 1(4):149-152 (2010)

[11] 10.Nishant Ramesh Wasatkar*, Prof. Ashwin K. Mahindrakar, A Review On Design, Development, Testing And Optimization Of Thompson Cv Joint With Brass And Phosphor Bronze As Trunnion Material, IJESRT Wasatkar, 4(1): January, 2015

**M 127**

# DESIGN and ANALYSIS of MATERIAL TRANSPORT EQUIPMENT FOR SMALLLOAD CAPACITY

Anuja A. Chiprikar [1], Radhika R. Menge[2], Pallavi S. Wale [3] , Bahubali B. Kabnure [4]
Student [1] [2] [3], Asst. Professor [4],
Department of Mechanical Engineering, DKTE's Textile and Engineering Institute, Ichalkaranji (INDIA)

***Abstract*:**
**Thematerialhandlingequipmentisthemediaoftransportationofmaterialfrom onelocationtoanotherinacommercialspace,spring operatedmaterialhandlingequipmenthas hugeloadcarryingcapacity,largecoveringarea,simplifieddesign,easeinmaintenanceandhigh reliabilityofoperation.Thismaterialhandlingdoesn'trequireexternalpower.Thecurrentwork consistsofdevelopingefficientmaterialtransportequipment,whichmoveforwardbyconverting thepotentialenergyofloadintokineticmotionofmodelwithrackandpinionmechanism.The designofequipmentisforapplicationsinsmallindustrialareafortransportingmaterialfromone locationto another. Thesystemis checked forload/forceanalysis usingansys.**

***KeyWords*:spring operatedmaterial handling,small industrial application, ansys**

## I. INTRODUCTION

Materialhandlingsystemevolves movementofmaterial,machinefromoneplaceto another.Itistechniqueusedtodelivertheright goodssafely,totherightplaceandtimeandatthe right cost.

Everymaterialhandlingsystemrequires somekindofpowerforitsfunctioning.Butdueto presentscenarioofworld'shighdemandofenergy andtheenergycrises,wehavetosavetheenergy aswellascostaspossible.Combining the handlingprocessmeanscarryoutothervalue addingprocessessuch asInspection,painting, cleaningwhile material is moving.

Agoodmaterialhandlingsystemseemsto achievetheprofitableproductbecauseabout80 % oftotalcostofproductisevolvedinmovement(non-valueadding)ofmaterialandonly20%of costisinvolvedincarryingoutactualprocessing ofproduct.VariousmaterialhandlingEquipments shouldbewellinstalledandmentionedforsmooth and continuous flow of material.

Followingareaswhichthematerialhandling happens in the organization-

1. Loadingon to an internaltransport.
2. Loadingonpackedmaterialsonto an external transport.
3. Shifting to and from the work stations.
4. Relocatingfromstorestotheplace to ofuse.
5. Movingto and assemblybenches.So, Plant layout should be carefully considered for effectivematerial

handlingsystem.Insmallscaleindustries,material transport equipmentisrequiredtotransferproducts from onelocation to another.

## I. METHODOLOGY

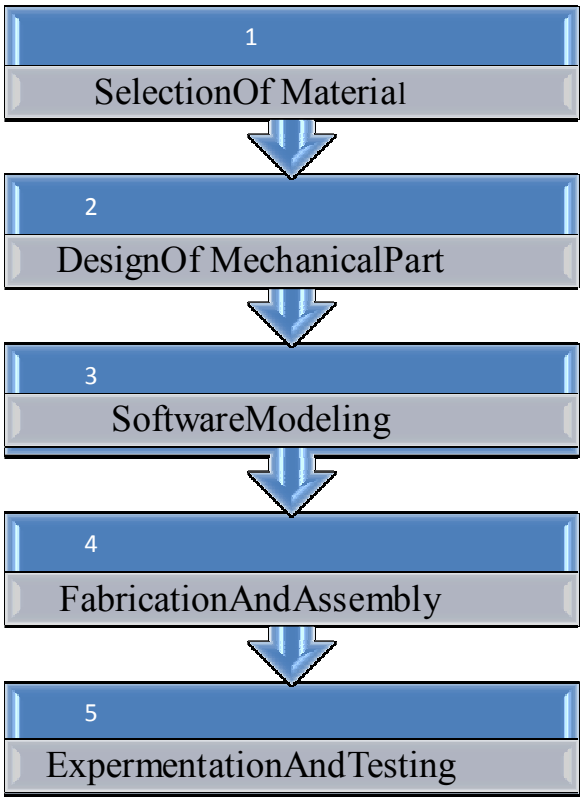


## II. MATERIAL TRANSPORT EQUIPMENT

Anautomatedguidedvehicleorautomatic guidedvehicleisamobilerobotthat followsmarkersorwiresinthefloor,or usesvisionmagnetorlaserfornavigation. Theyconcludedthatthematerialhandling equipmentreducematerialhandlingtime aswellascost.wecanachievesafetyof materialhandlingandreducemanpower. thusproductivityofindustrywillincrease. [1]

Indesignandfabricationofefficient materialtransportequipment,itmoves forwardbyconvertingthepotentialenergy oftheloadintokineticmotionofmodel. Theirprojectusesnoexternalsourceof powerforitsoperation,thisprojectcan provetobeaboonindisguiseformaterial transport requirement in industries. [2]

## III. WORKING

Whenworkisplacedonthetrayduetothe weightofthatworkpiecetheinnerpipe moveddownward,therackisconnected withtheinnercylinderhenceitmoveswith thatcylinder.Therackisinmeshwiththe pinionontheinputshaft;hencethe downwardmotionofrackcausesthe rotationofinputshaft.Alsoasprocket wheelisattachedtotheinputshaft,hence throughchaindrivethemotionofinput shaft is given to output shaft.

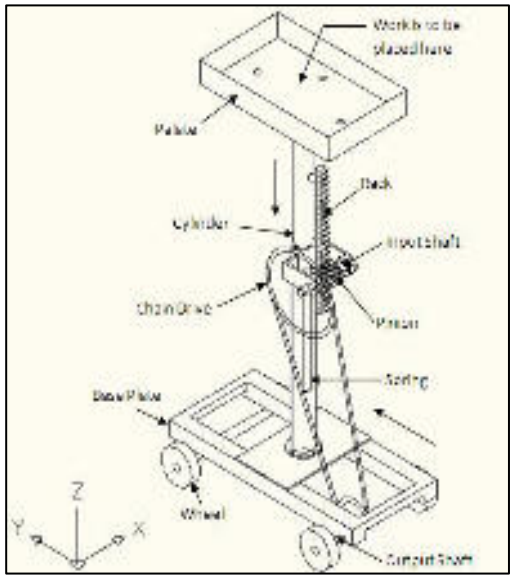


Therearwheelsofthebottomframesare on the output shaft, hence as the output

shaftrotatesitcausestheforwardmotion ofentireframealongwiththeworkpiece. Alsoafterunloadingofworkpiece,dueto springaction,theemptybodycomesback to its original position.

## IV. DESIGN

1. Total mass to be carried=40 kg= 392.4 N
2. Minimum linear distanceto be covered = 5000 mm

DESIGN OFSPRING

- Deflection (δ) =190 mm
- Wirediameter(d)=3.5mm
- Mean coil diameter (D) =31.5 mm
- Spring Index(C) =9
- Stiffness (k) =2.10 N/mm
- No. ofactiveturns(N) =31
- Total no of turn () =33
- Freelength = 334 mm
- Pitch of coil =10.43mm
- Outer diameter =35 mm
- Inner diameter =28 mm

DESIGN OFPINION

1. Modulem = 2.25 mm
2. No. ofteeth's=22
3. Addendum = 1 m = 2.25 mm
4. Dedendum = 1.25 m = 2.8125 mm
5. PCD ofpinion =50 mm
6. Width b =16 mm
7. Tooth Thickness = 1.5708 m = 3.5343 mm

DESIGN OFGEAR:

1. Modulem = 2.25 mm
2. No. ofteeth =58
3. Addendum = 1 m = 2.25 mm
4. Dedendum = 1.25 m = 2.8125 mm
5. PCD ofpinion =130 mm
6. Width b =16 mm
7. Tooth Thickness = 1.5708 m = 3.5343 mm

DESIGN OFRACK:

1. Modulem = 2.25 mm
2. No ofteeths = 57
3. Addendum = 1 m = 2.25 mm
4. Dedendum = 1.25 m = 2.8125 mm
5. Length of Rack =384 mm
6. Pitch of rack =7 mm
7. Width b =20 mm
8. Tooth Thickness = 1.5708 m = 3.5343 mm

DESIGN OFSHAFT

Material = Plain carbonSteel (40C8)

Diameter =16 mm

DESIGN OFCHAIN DRIVE-

1. No ofteeth on bigger sprocket (Z1) =55
2. No ofteeth on smaller sprocket (Z2)=12
3. Diameter ofbigger sprocket =220 mm
4. Diameter ofsmaller sprocket =50 mm
5. Chain thickness = 12mm
6. Length of chain (L) = 1500 mm
7. Center distancebetween 2 sprocket= 520 mm

DESIGN OFOUTER PIPE-

1. Inner diameter ofpipe=38 mm
2. Outer diameter ofpipe = 42 mm
3. Length of pipe=600 mm

DESIGN OF INNER PIPE -

1. Inner diameter ofpipe=28 mm
2. Outer diameter ofpipe =32 mm
3. Length of pipe=455 mm

## V. ANALYSIS

| Parameter | Shaft Material MildSteel | Gearand Pinion C408 |
|---|---|---|
| Density (kg/m3) | 7800 | 7850 |
| Youngs Modulus (GPa) | 210 | 210 |
| YieldStrength (MPa) | **200** | **560** |
| Poisson's Ratio | 0.3 | 0.3 |

**Obejective**

FEA analysis of thestructureis to be carried under the action of vertical forceof 40 Kg.(400N)

**BOUNDRYCONDITIONS**

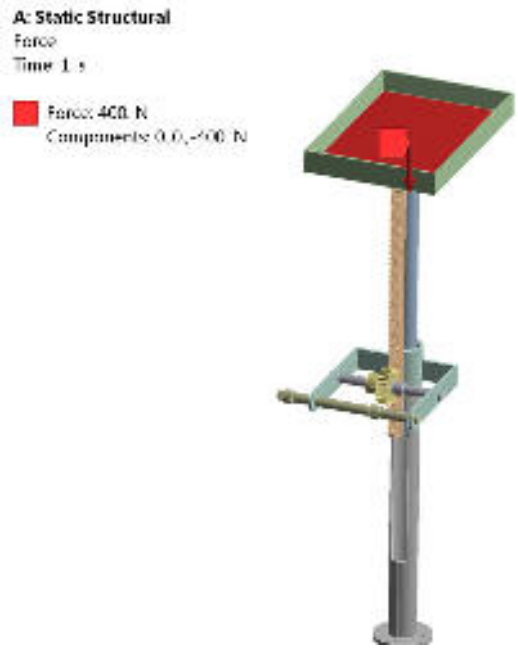


Forceof 400 N is appliedon traysurfacein vertical downward direction as shown.

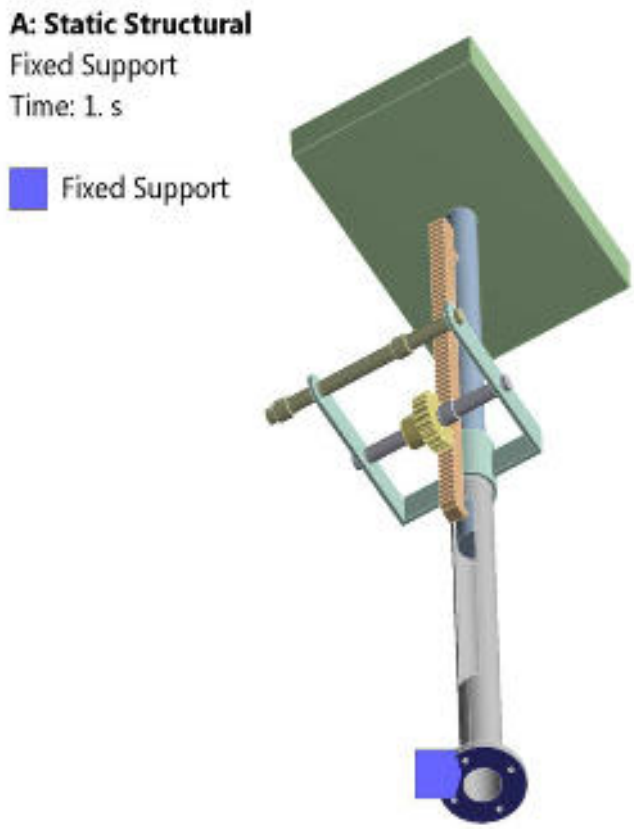


Fixed Support is applied at bottom of flange

## TOTAL DEFORMATION

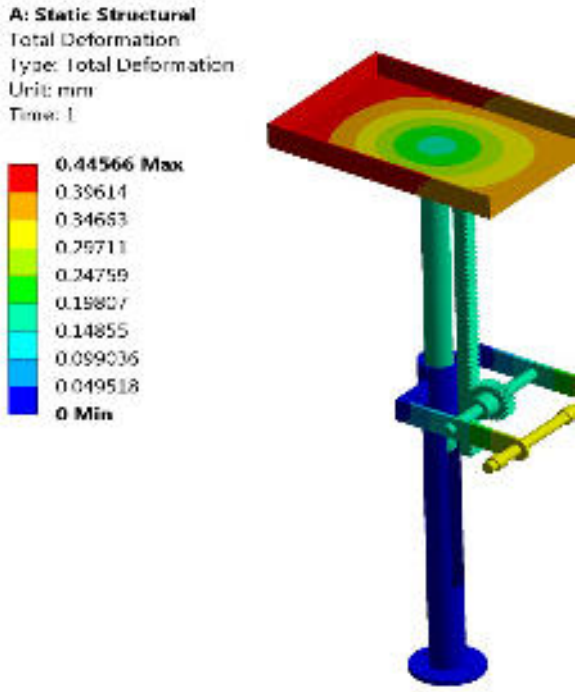


Maximumdeformationisobtainedontopsurface oftraywheretheforceof400Nisapplied, maximum deformation value is 0.44 mm.

DIRECTIONALDEFORMATION

Directional deformationzaxis

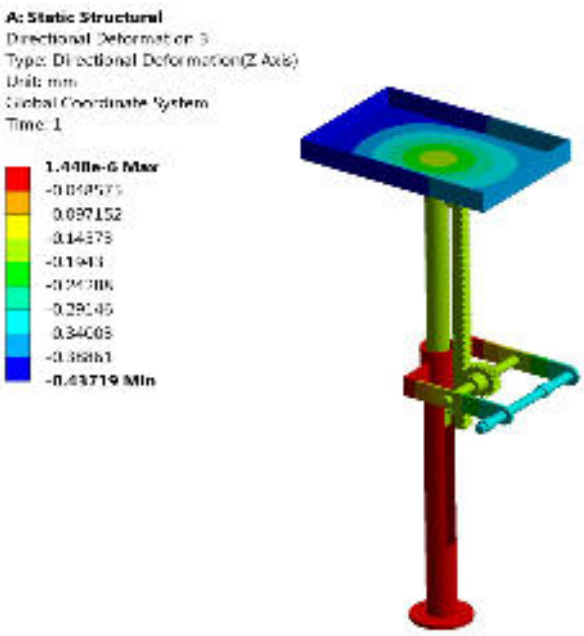


Directional deformationxaxis

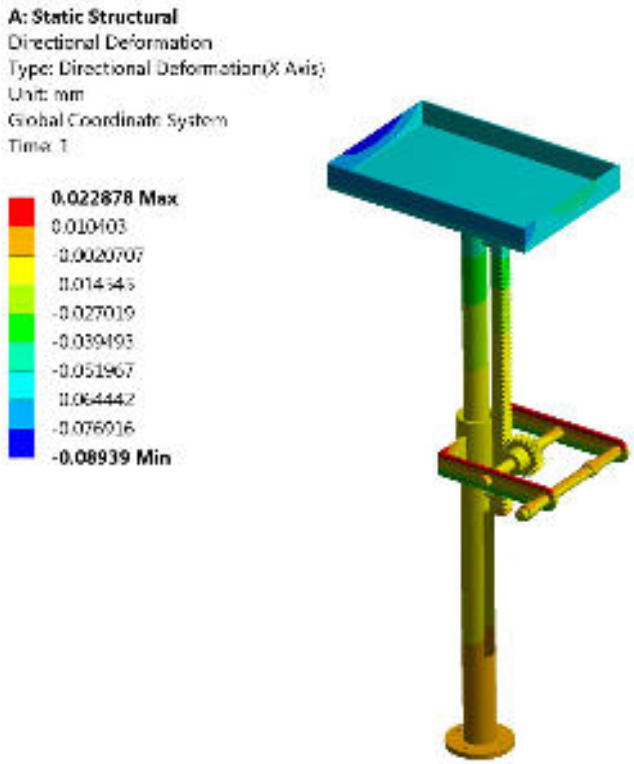


directional deformationyaxix

Von mises equivalent stress

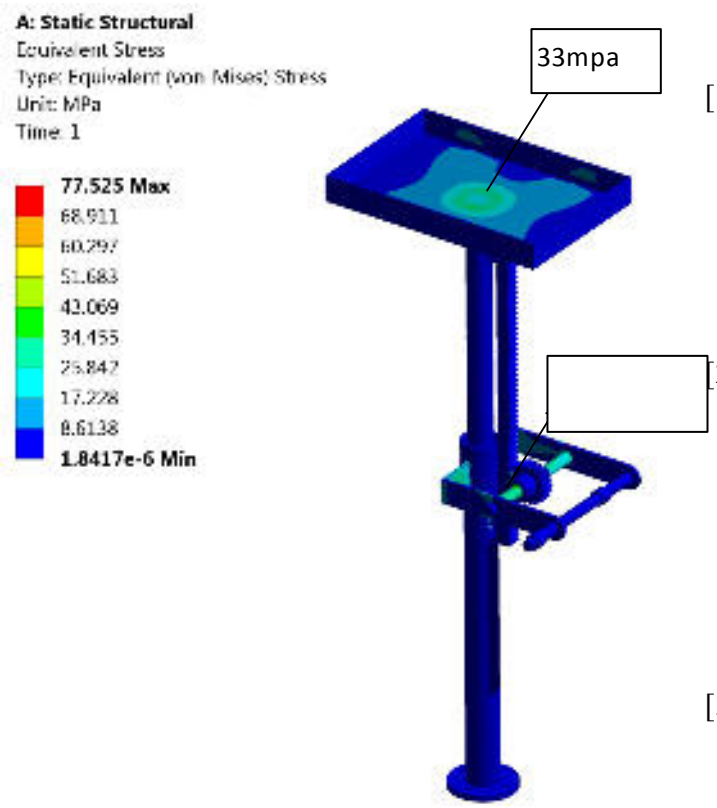


## REFERENCES

### ➢ Books:

[1] DesignofMachineElementsbyV.B. Bhandari(editionthirdfifteenth reprint 2014) chapter2. Engineering material, chapter 1 0. springs, chapter 17. spurgear, chapter 15. rolling contact bearing.

[2] Abhijeet R . Maske, Mahadhan M . Jadhav,LaximanB.ShindeandYogeshN.Sule-Patil,**DesignandFabricationofSpring OperatedMaterialHandlingEquipment,** InternationalJournalofTrendinResearchand Development, Volume3(2)

[3] VenkateshDeshpande,AkshayAKarekar, TejasPatil,ShashikantShahapurkar, PraveenkumarHubalikar,**Designand FabricationofEfficientMaterialTransport Equipment,**InternationalResearchJournalof EngineeringandTechnology(IRJET)Volume: 04Issue: 06|June -2017

[4] KumbharP.M.,BallalY.PandPawarG.B. **VariousMaterialHandlingSystemsin Foundry:AReview,International**Journalof TrendinResearchandDevelopment,Volume 2(5)

**M 128**

# DESIGN and DEVELOPMENT of AUTOMATIC CAMSHAFT BEND REMOVING MACHINE

Gowri R. Teli [1], Usha U. Nazare [2], Sheetal S. Sapkal [3] , Bahubali B. Kabnure [4]
Student [1] [2] [3], Asst. Professor [4],
Department of Mechanical Engineering, DKTE's Textile and Engineering Institute, Ichalkaranji (INDIA)

***Abstract*: With the advent of automation and to remain in the global competition, the industries are manufacturing the components at higher rates with customer demanding the best quality products. So, the production and inspection must be quickly, economically and accurately done for better customer satisfaction and providing them defect free products in right quantity and at right time. This calls for automated production and inspection, which not only reduces the production, inspection and labour but also ensures accurate product delivery by introducing interlocks in the system where the system gives an alarm if any defective product is present in the system. This paper includes the design and development of automatic camshaft bend removing machine and the advantages of automated production and inspection over conventional process.**

***Key Words*:** *Automated inspection, micro-controlling, 100% inspection, customer satisfaction.*

## INTRODUCTION

Camshaft is one of the key parts in the engine of automobile and other vehicles. A cam is a mechanical device used to transmit motion to a follower by direct contact. The driver is called the cam and the driven member is called follower. In a cam follower pair, the cam normally rotates while follower may translate or oscillates. Arrangement of cam and shaft is as shown in fig.1.

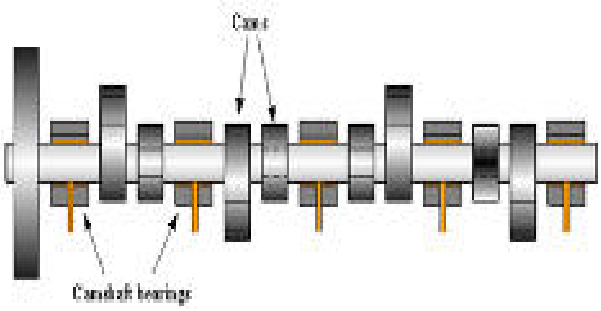


**Figure 1: Cam and Camshaft**

**1) Bend Shaft Straightening:**

In perfectly straight shaft, the centers of shaft cross-section from end to end lie on a straight line. In a bent shaft, the axis of the shaft is different than its axis of rotation. Run- out is an inaccuracy of the rotating mechanical systems, especially shaft does not rotate exactly in line with the main axis. Run-out is measured using a dial indicator pressed against rotating shaft as shown in fig.2.

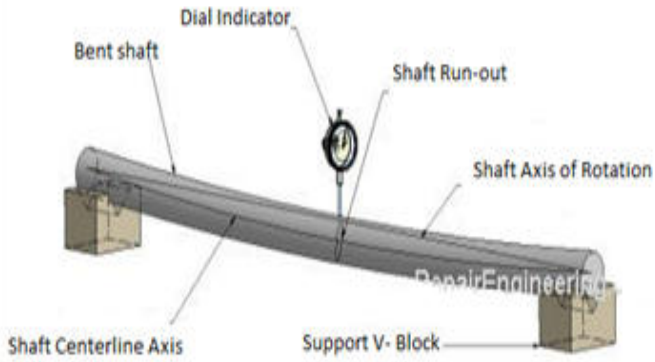


**Figure 2: Shaft Run out**

**2) Causes to Bend Shaft:**

- Mechanical Overload:
  - Damage during improper handling.
  - Impact during operations.
  - Machine misalignment.
- Internal Stress Relief:
  - Elevated temperature.
  - Vibrations.

## I. PROBLEM DEFINATION

Presently in the company, there is

1) Manually rotating the job by using roller.
2) Manually measuring the bend value using dial indicator.
3) Manually adjusting the job below the ram of press.

To achieve above operations lot of time is consumed. There are maximum unwanted efforts of the workers to achieve the above operations. The required accuracy is not achieved due to human errors. Due to continuous removing of roller after each operation, the rate of production is reduced. Lot of money is wasted in wages of the workers.

## II. OBJECTIVES

Following are the main objectives of the project:

1) To rotate the shaft with the help of gear motor.
2) To push the rollers inside the V-block automatically when the load is applied on the shaft.
3) To measure bend value by using bend sensors.
4) To move the job on the table by introducing groove on the table.
5) The production and inspection must be quickly, economically and accurately done for better customer satisfaction and providing them defect free products in right quantity and at right time.

## III. METHODOLOGY

There are several methods for bend straightening as follows:

1) Mechanical Shaft Straightening
2) Spot Heat Shaft Straightening
3) Penning Shaft Straightening
4) Opposed Heating and Cooling Shaft Straightening

## IV. PRESENT METHODOLOGY

1) After manufacturig of camshaft, it is brought to the bend detect section in the company.
2) With the help of crane which is operated by 2 workers the cam shaft is placed on the table.V- blocks are used to support the shaft.
3) Shaft is rotated by using rollers. Rollers are operated manually.First 1st worker rotates the roller and 2nd worker measure the bend by placing dial indictor at different position on the shaft. Worker mark the bend point on the shaft with help of pen.
4) After locating the bend points, the rollers are removed aside because bearing from the roller may get damaged due to heavy load of the press while pressing the press on job.
5) Now with the help of metal chain, the shaft is properly placed on V-blocks.
6) Now the point where bends is present placed below the press. The hydraulically operated press is actuated slowly down.
7) Shaft is roataed so that high side of the bend with greatest magnitude of deflecion is positioned directly under the ram of press.
8) By applying load, the bend is removed.
9) Repeat the process until the desired shaft straightness is obtained as fig.3.

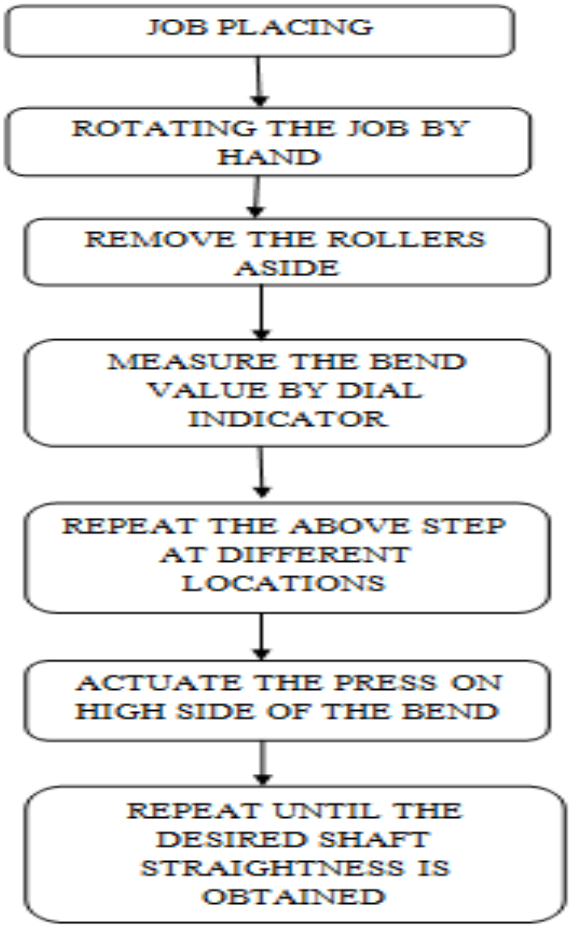


**Figure 3: Present Methodology**

**Figure 4: Company Setup**

## V. MODIFIED METHODOLOGY

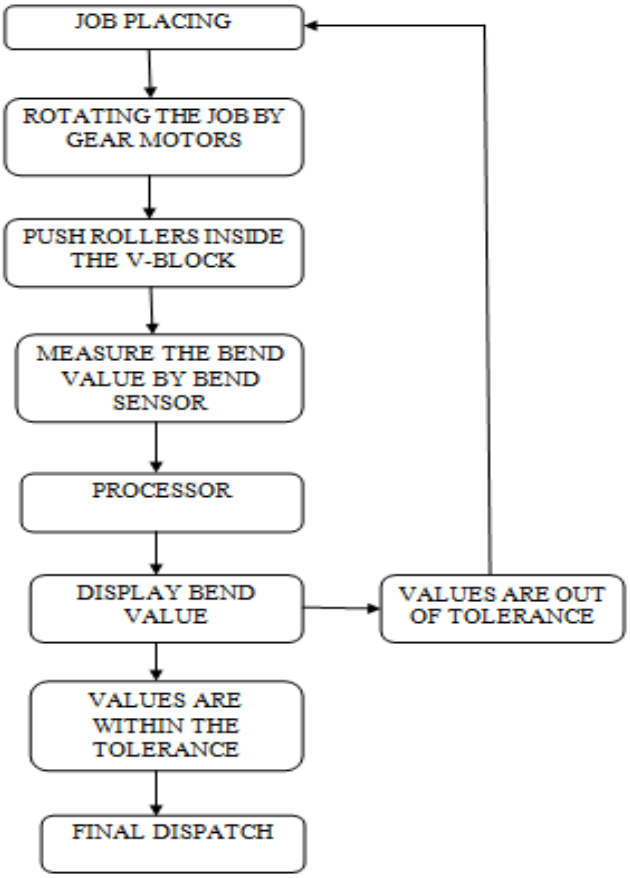


**Figure 5: Modified Methodology**

1) After manufacturig of camshaft, it is brought to the bend detect section in the company.
2) With the help of crane which is operated by 2 workers the cam shaft is placed on the table.V- blocks are used to support the shaft.
3) Shaft is rotated by using rollers. Rollers are rotated by using gear motor.
4) Measure the value of bend by using bend sensors.Mark the point where bend are detected on the shaft.
5) After locating the bend points, the shaft is moved under the ram of the press with the help of grooves in the table
6) The "high side" of the bend with the greatest magnitude of deflection is positioned directly under the ram of the press.
7) The press is actuated slowly down
8) As the load is applied on the shaft, the rollers will move inside the V- block which is spring operated.

9) By applying load, the bend is removed.
10) If the values are not within the tolerance at any point, then procedure is repeated.
11) Repeat the process until the desired shaft straightness is obtained as fig.5.

## VI. PROPOSED DESIGN

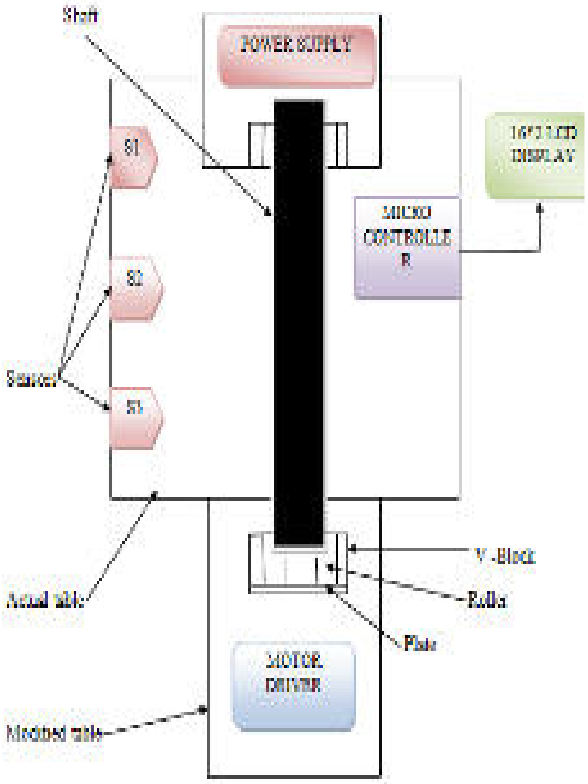


**Figure 6: Proposed Design**

## VII. COMPONENTS

The required component for the modification as shown in fig. 6 is as follows:

### 1) Bend Sensors:

It is sensor that measures the amount of deflection or bending as shown in fig. 7. Usually, the sensor is stuck to the surface, and resistance of sensor element is varied by bending the surface. For modification, 2 inch sensor is used.

**Figure 7: Bend Sensor**

### 2) Geared Motor:

Gear motors are the electronic motors. The combination of an electric motor and gearbox reduces design complexity and lowers cost, particularly this motors are built for high torque and low speed applications. For modification, 50 rpm, central shaft, DC motor is used as shown in fig. 8.

**Figure 8: Geared Motor**

### 3) Microcontroller:

The Atmega is single chip microcontroller created by Atmel in mega AVR family as shown in fig. 9. For modification, Atmega 328Arduino Board is used as it is low cost and low powered.

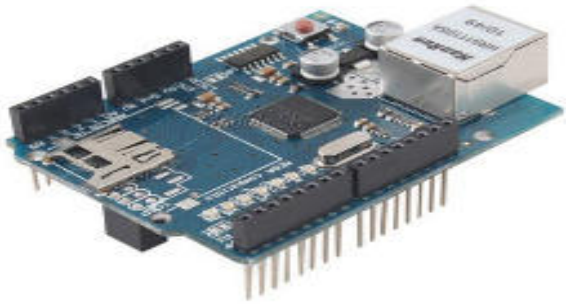

**Figure 9: Atmega 328 Arduino Board**

**4) LCD Display:**

LCD stands for liquid crystal display. For modification, 16*2 LCD is used. 16*2 LCD is named so because it has 16 Columns and 2 rows as shown in fig 10. It is used for displaying bend value.


**Figure 10: LCD Display**

**5) Spring:**

Spring is device made up of helically formed coils with pitching. For modification, compression spring is used. It is used to store mechanical energy. Compression spring is shown in fig. 11.

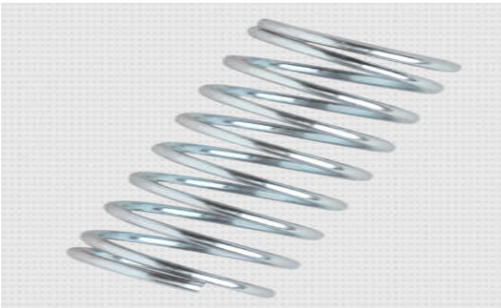

**Figure 11: Spring**

**6) V- Block:**

V-Blocks are precision metal working jigs typically used to hold round metal rods or pipes. For modification, metal steel hardened V-block are used of length 250mm, breadth 35mm, height 150mm.Block has V groove as shown in fig. 12.

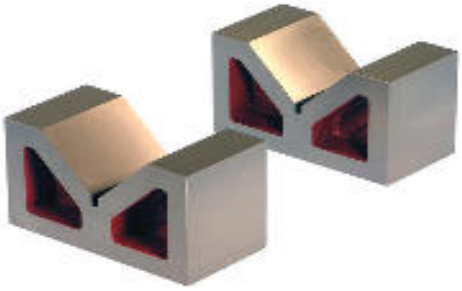

**Figure 12: V-Block**

**7) Roller with Ball Bearing:**

Roller bearing is a bearing which carries a load by placing rolling elements (such as balls or rollers) between two bearing rings. Roller bearing element is used to support as well rolling shaft. For modification, synthetic rubber coated mild steel roller with ball bearing are used as shown in fig. 13.

**Figure 13: Roller with Ball Bearing**

## VIII. CAD MODEL OF SETUP

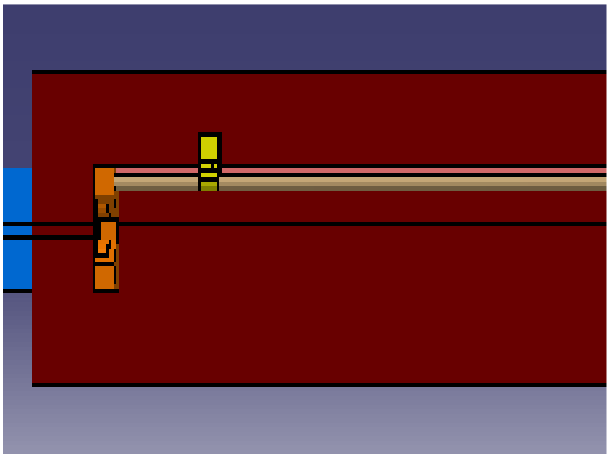

**Figure 14: Top View of Setup**

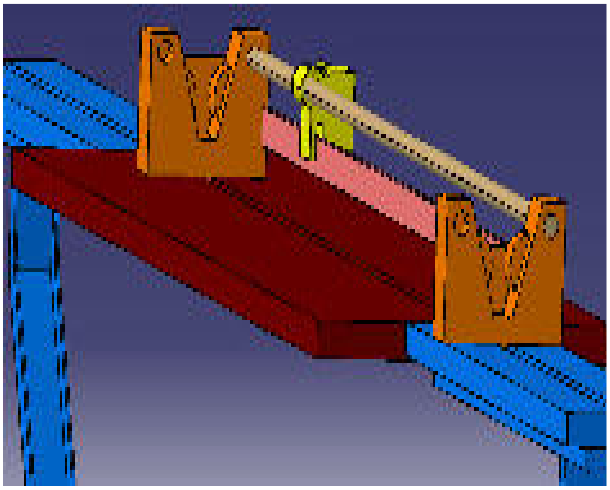

**Figure 15: Setup**

The setup consists of all components which are needed to manufacture. It is actual bend detect and display machine. Bend detects and display machine is designed as per company required. Setup consists of modified table with groove, roller with block bearing, v- block, springs; bend sensor, designed sensor block, sensor guide, microcontroller and led display.

The rollers with ball bearing are placed on the table in the groove present on table. The roller with bearing is assembled in one block. Spring is attached down the roller which pulls and retracts the bearing of roller when the force is applied on shaft. Three bend sensors are used to detect the bend value. Sensor block consists of lever. Bend sensor are at one side and led on other hand. As soon as bend is present it is detected by senor in lever will move and led will get on. When led will on it clear that bend is present at particular position. The point is marked and press is pressed at that position. Shaft is supported on v-block. Shaft is adjusted as bend position by moving it through groove over the table.

## IX. DESIGN OF ROLLER SUPPORT MECHNISM

Presently, shaft is rotated by using rollers. Rollers are operated manually. After locating the bend points, the rollers are removed aside because bearing from the roller may get damaged due to heavy load of the press while pressing the press on job as shown in fig. 16.

To reduce human efforts for removing rollers regularly, we designed mechanism such that as the load is applied on the shaft, the rollers will move inside the V- block which is spring operated. Rollers are rotated by using gear motor. Block is made such that roller with ball bearing is fixed between two plates. Shaft is placed on roller. As roller rotates with the help of geared motor, the shaft is also rotated.

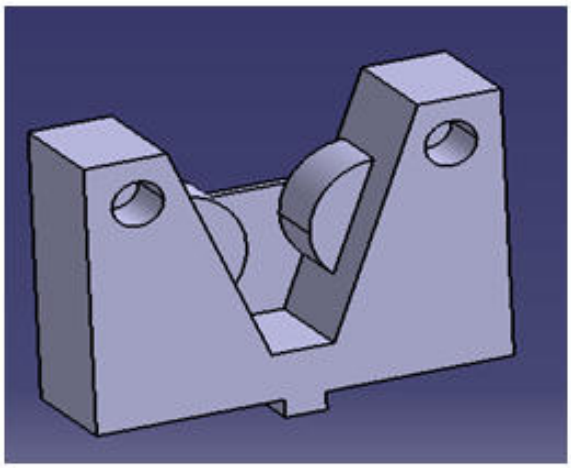

**Figure 16: Roller Mechanism**

## X. WORKING OF BEND SENSOR

The impedance buffer in the [Basic Flex Sensor Circuit] is a single sided operational amplifier, used with these sensors because the low bias current of the op amp reduces error due to source impedance of the flex sensor as voltage divider. Fig no. 17 represents the working of bend sensor.

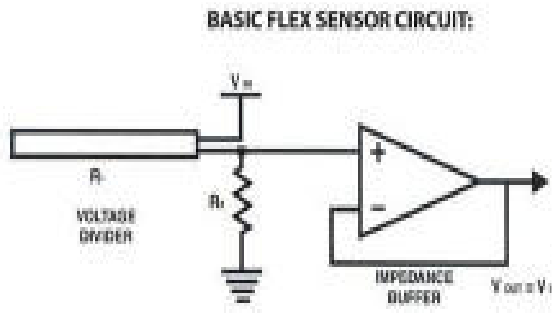


**Figure 17: Working Principle of sensor**

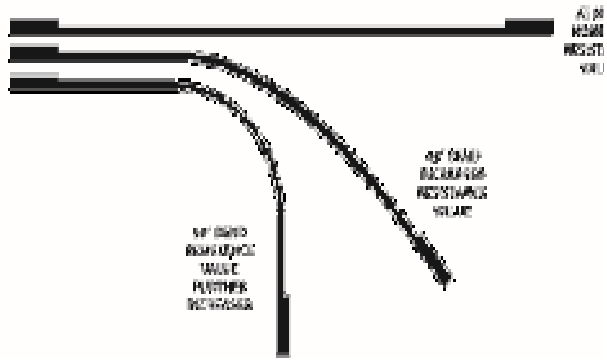

**Figure 18: Flex Sensor offers variable resistance reading**

## XI. CONCLUSION

To overcome the human effort, we are designing and developing 'Automatic Camshaft Bend Detecting and R emoving Machine'. Shaft is rotated by using rollers. Rollers are rotated by using gear motor.To measure the value of bend by using bend sensors.After locating the bend points, the shaft is moved under the ram of the press with the help of grooves in the table. In our design as the load is applied on the shaft, the rollers will move inside the V- block which is spring operated. In tis project we are dealing regarding with bend reomving machine and method to overcome it.

## XII. REFERENCES

[1] Mr. S.G. Thorat, Arvind Shinde, ***"Design and Analysis of Camshaft",*** Proceedings of 11th IRF Intentional Conference, 15th June 2014, Page No - 54-58.

[2] Vivekanandan.P, Kumar. M, ***"Modeling, Design and Finite Element Analysis of Camshaft",*** International Journal of Current Engineering and Technology, Volume 3 Issue No. 1, March 2013.

[3] Miss. M. Shobha, ***"Analysis of Camshaft in Automobiles Using Different Material",*** International Journal of Engineering Science and Computing, Volume 6 Issue No. 10, October 2016, Page No- 2893-2896.

[4] Mr. Harshad Khairkar, Prof. Sarang Gulhane, ***"Fabrication of automatic hydraulic bending and bend removing machine",*** International Research Journal of Engineering and Technology, Volume 2 Issue 2 , Feb 2017.

[5] Omer Salem, Shehwar Hussain,***"Performance Optimization of Flex Sensor",*** International Journal of Engineering Research and Technology, Volume 3, Issue 5, May 2014.

[6] Alapati Sreejan, Yeole Narayan, ***"A Review on Application of Flex Sensor",*** International Journal of Emerging Technology and Advanced Engineering, Volume 7, Issue 7, July 2017.

**M 131**

# MOBILITY ASSISTIVE DEVICE

Bhai Kurukale [1], Dinesh Nadgauda [2], Mayur Sawant[3], Kiran Chirmute[4], V. B. Magdum[5]
Student [1] [2] [3] [4], Asst. Professor [5],
Department of Mechanical Engineering, DKTE's Textile and Engineering Institute, Ichalkaranji (INDIA)

**Abstract: In society, there are different health problems to persons when he becomes old. One of the common health problems of older persons is regarding pain in body joints like elbow, knee, arms, toe and other orthopedic problems. When person wants move such organs, he feels pain and facing difficulty to move organs. Independent mobility is critical for the disable and old persons. Every time there is need of other persons to help such disable humans. So to avoid that other people help mobility assistive devices are manufactured. Thus, the goal of this project is to review the state of the art in the automatic technology for mobility assistive devices for people with mobility disabilities. The important role of mobility assistive device is to provide the help to the person to stand and walk individually. The advances in the walkers' field have been enormous and have shown a great potential on helping people with mobility disabilities. So the to overcome mobility problems, we decided to design and fabricate the mobility assistive device which helpful to disable person to stand and walk individually. In this mechanism we will use DC motor and Screw jack mechanism which having self locking mechanism. This mechanism is very useful to disable person because there is no need to person to stand by own efforts and once he stand by this mechanism then he can walk individually with support of this device.**

**Key Words: Linkages, Screw jack, DC Battery, DC Motor, Control System, Wheels**

## 1.INTRODUCTION [1]

During the twentieth century the proportion of elderly people had an important rise, and this trend is expected to continue into the twenty-first century. The proportion of population over 60 years old was 8% in 1950, 10% in 2000, and it is estimated to reach 21% in 2050. Loosing complete or part of mobility, affects not only the ability to walk but also the ability to perform personal tasks, which is a major determinant in life quality and causes dependence of others in daily life. In an aging society it is extremely important to develop devices, which can support and assist the elderly in their daily life, since their mobility degrades with age. This situation requires a great medical care, incurs large costs and can be fatal in some cases. Elderly tend to have cognitive impairments and experience more serious falls but there is strong evidence that daily exercise may result on fall prevention and postural stability.

**Fig. 1.1 various mobility devices**

On the other hand, the augmentative devices are developed to users with residual mobility capacities. They are used to avoid, whenever possible, the inadequate use of alternative devices, thus improving the physical and cognitive capabilities. These

elements can be used as mobility-training devices, self-ported devices, such as prostheses or outhouses, or external, such as crutches, canes and walkers. Among the external augmentative devices, we will focus our review on the walkers. Besides, these devices enable to identify the movement intentions of the users and therefore control the mobility assistance accordingly. We intend to cover all of the major developments in the mobility assistive devices described before, particularly focusing on the walker devices. In this review, it is introduced a brief presentation of the causes and consequences of the gait dysfunctions that lead patients to use mobility assistive devices. Then, it is reviewed the literature regarding the corresponding mobility assistive devices. Finally, we focus on the literature regarding the walker' devices, presenting a more detailed review about the various existing models to date. It is presented a discussion of this information, summarizing the major accomplishments in the field and identifying the limitations and challenges to be overcome in future researches.

Stability and balance in ambulation are fundamental to independent activity and quality of life. Individuals who do not have such stability and balance require the help of assistive devices that may improve their condition [1,2]. Given the importance of assistive devices and the impact they have on the functional ability of the user, research needs to conceptualize and improve investigation on this area. Assistive devices need to grow in terms of design and effectiveness in the user's rehabilitation process and functional compensation. In the first stage of rehabilitation, treadmill exercises are often prescribed since they have a partial body-weight relief by means of belts or suspension systems. Nevertheless the patient should start walking on the floor as early as possible. Therefore, patients exercise with parallel walking bars, walkers or crutches. However, the parallel walking bars restrict the patient's movement to a small area, and crutches are unilateral and do not provide enough support for the muscles.

## 1. PROPOSED CONCEPT [1, 2, 3, 10, 11, 12]

Mobility assistive device is mainly based on Screw jack mechanism, Bell crank levers and linkages. First of all we decided all components which required for project. Then we designed these components one by one. Those components are as below

1. Bell crank levers and Linkages
2. Screw jack mechanism
3. DC Motors
4. Battery
5. Control System
6. Wheels
7. Leather seat
8. Support Pillars

Currently, We designed Bell Crank levers with particular dimensions. We selected DC motor, Screw jack and Battery as per our project specifications.

**Fig. 2.1 Proposed Concept**

## 2. CONSTRUCTION [1, 2, 3]

- Mobility Assistive Device mainly consist of
  a. Bell crank levers and Linkages
  b. Screw jack mechanism
  c. DC Motors
  d. Battery
  e. Control System
  f. Wheels
  g. Leather seat
  h. Support Pillars

1. Motor and Screw jack are connected by gear mechanism to reduce the speed of motor. Control system is used to regulate the current supplied by the Battery. Dry battery is used which having 12 volt capacity. Ultimately purpose of control system Is to obtain the gradual motion of screw jack and bell crank lever Bell crank lever are used because these levers can move circular direction. Switch is provided to operate the system. Leather seat is provided to sit the person on it when he tired after walk. This all assembly is supported by four steel pillars which place on wheels This system can take average weight of person (70-75 kg)

## 3. WORKING [1, 2, 3, 10, 11, 12]

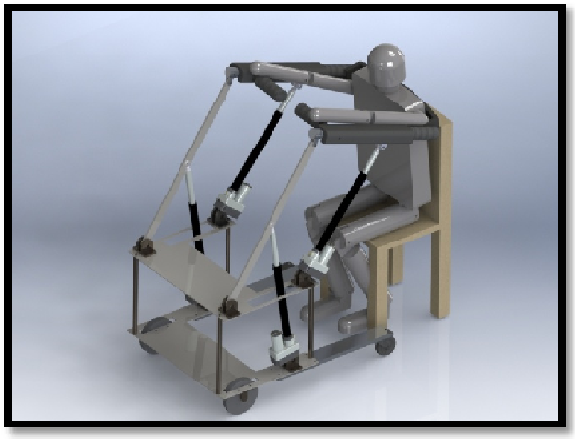

**Fig. 4.1 Working Mechanism**

1. In this mobility assistive device, switch is provided when we on this switch current transfer from battery to motor.
2. Control system is used for controlling the motor speed.
3. Once motor runs then screw jack mechanism get activated and linkages move in upward direction slowly.
4. To obtain the slow motion gear mechanism is used.
5. The person sit on the chair keep his hand on handle which connected to the linkages.
6. Slow motion of linkages transferred to handle and then to persons hand.
7. So, person can get lifted without his efforts and stand on his leg.
8. Once he stands up then he can walk with the help of this device.
9. When person becomes tired due to walking then he can sit on the leather seat connected to device.
10. After relaxing some time on this seat he can again walk.
11. Finally person wants to seat on the chair then just press the button to get down slowly.
12. So working of this system is very simple than other devices.
13. Disable person do not give any efforts during the standing only system can lift whole weight of person.

## 5. BASIC COMPONENTS AND DIMENSION OF DEVICE [1, 2, 3, 4, 10, 13]

Length- 75 cm
Width - 60 cm
Height- 125 cm
Weight- 25 kg

**Table 1. Basic Components**

| COMPONENTS | MATERIAL | SPECIFICATIONS | QUANTITY |
|---|---|---|---|
| Bell crank | Mild steel | | 4 |
| Screw jack | Plain carbon | | 2 |
| DC Motor | - | Torque- 18 | 2 |
| Dry Battery | - | Dry | 1 |
| Control | - | | 1 |
| Wheels | Thermoplast | D- 8 cm | 4 |
| Seat | leather | L*W= | 1 |

## 6. COMPONENTS AND DESCRIPTION [1, 2. 3, 7, 8]

### 1. Bell crank levers:

We will use mild steel Bell crank lever is which is used to transfer the motion to the persons hand. We will use total four bell crank lever on both side of human hand. It is used because it can move in angular direction since it is fixed at middle end.

**Fig.6.1 Bell crank levers**

1. **Screw jack mechanism:**

Screw jack is used for the transferring the rotary motion of motor into linear motion. It is used for the locking purpose also when particular height is obtained. We will use small size screw jack of 1 tone lifting capacity.

**Fig. 6.2 Screw jack mechanism**

2. **DC Motors:**

DC motor is used to actuate the actual system. Current is supplied to DC motor by battery. We will use DC motor of 18 Nm torque capacity. We will use total 2 DC motors in our device on both side of person.

**Fig. 6.3 DC Motors**

3. **Dry Battery:**

Battery is used for supplying the current to the motor. We will utilize the dry battery of 12 volt capacity.


**Fig. 6.4 Dry Battery**

4. **Control system:**

Control system is used to balance the system and movement of the linkages and bell crank lever. This control system controls the motion of the linkages, bell crank lever and other components of device gradually. We will use only one control system for balancing both side.

**Fig. 6.5 Control system**

5. **Wheels:**

Wheels are used for mobility purpose of device. We will use Thermoplastic rubber wheels which are light weight and easy to run on ground with minimum friction.

**Fig. 6.6 Wheel**

6. **Leather Seat**

Seat will be used for seating purpose for persons. This seat is very flexible and holed by linkages. When person get tired during walking he can sit on it comfortably.

**Fig. 6.7 Leather Seat**

## 7. DESIGN AND SELECTION OF COMPONENTS

### 7.1 DESIGN OF BELL CRANK LEVER

**[5, 6, 7, 8, 9]**

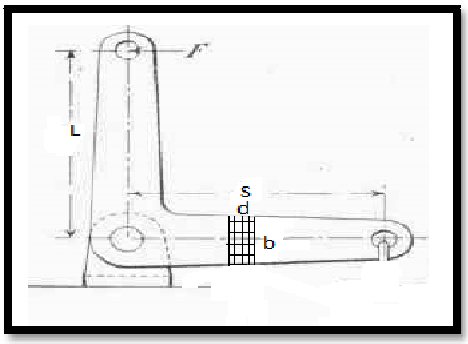


**Fig. 7.1.1 Bell crank lever**

Long arm = L = 220 mm

Short arm = S = 140 mm

Length of small cross section of lever = d = 32 mm

Width of small cross section of lever = b = 12 mm

Yield Tensile stress = Syt.= 400 N/mm$^2$

Factor of safety = fs = 1.5

Bearing pressure = p = 10 N/mm$^2$

(From V. B. Bhandari book)

Diameter of fulcrum pin = $D_1$

Length of fulcrum pin = $L_1$

L1/D1 = 1.25

(From V. B. Bhandari book)

Force/load = F = 442 N

Bending moment of lever = $M_b$

Moment of inertia of cross section = I

**Calculations for permissible stresses in pin and lever:-**

$\sigma_t$ = Syt / fs = 400/1.5

= 266.666 N/mm$^2$

$\tau$ = Ssy / fs = 0.5*Syt / fs

$= 0.5*400 / 1.5$

$= 133.333\ N/mm^2$

**Calculations for forces in lever:-**

$P = F*S/L$

$P = 442*140 / 220$

$= 281.27\ N$

$R^2 = F^2 + P^2$

$= 442^2+281.27^2$

$R= 523.90\ N$

**Diameter and length of fulcrum pin:-**

$R= p*D_1*L_1$

$523.90 = 10*D_1*1.25D_1$ $(L_1/D_1= 1.25)$

$D_1= 6.670\ mm$

$L_1= 8.08\ mm$

**Shear stress in pin:-**

$\tau = R/(2* \pi / 4*D_1^{2)}$

$= 523.90 / (2* \pi/4*6.67^2)$

$= 7.49\ N/mm^2<133.333\ N/mm^2$

**Bending stress:-**

$M_b= F*S$

$= 442*140\ N/mm^2$

$I= 1/12*bd^3$

$= 1/12*12*32^3$

$= 32768\ mm^2$

$y = d/2= 32/2$

$= 16\ mm$

$\sigma_b = M_b*y / I$

$= 442*140*16/32768$

$= 30.24\ N/mm^2$

### 6.2 SELECTION OF COMPONENTS [3, 15]

**1. Battery:**

1. 12 volt (dry)

**2. Motor:**

1. DC gear motor
2. Torque = 20 Nm
3. rpm = 40-45

## 8. ADVANTAGES, LIMITATIONS AND APPLICATIONS

### 8.1 ADVANTAGES:

1. A portable, independently operated mobility assistance medical device that helps individuals stand-up, sit down and walk.
2. The patients can get into the device themselves Comfortably and lifts, walks, and stabilizes the user
3. NO other person is required to help patient.
4. The device has battery powered lifts that bring a patient from seated to standing position in a biomechanically correct motion.
5. Reduces the risk of falling: patient is positioned so their COG (center of gravity) is always within the support of the system.
6. Compact, Robust, and Light Weight Design.

### 8.2 LIMITATIONS:

1. Design for only 120 kg.
2. To make light weight cost will increase.

### 8.3 APPLICATIONS:

1. In Orthopedic Hospitals
2. For old and Disable persons at home
3. Mobility Assist Device is also useful to stand the Person who cannot walk without taking help from other.

## 9. REFERENCES

[1] 'Sit-to-Stand and Mobility Assistance Device' Yuan Chang, Angad Deep Singh, ME450 Winter 2010, April 20, 2010.

[2] 'Optimization of Watt Six-bar Linkage to Generate Straight and Parallel Leg Motion' Hamid Mehdigholi and Saeed Akbarnejad, Journal of Humanoids, Vol. 1, No. 1, 2008.

[3] 'Design Of Motorized Wheelchair' Tadakamalla Shanmukh Anirudh a Jyoti Pragyan SatpathY, vol. 46, no. 9, pp. 1207-1235, 2014.

[4] 'Design And Fabrication of Staircase Climbing Wheelchair' R Rajasekar, K P Pranavkarthik, R Prashanth1, Vol. 31, No. 10, pp. 1244-1254, 2012.
[5] 'Design of Machine Elements' V. B. Bhandari, Mc Graw Hill education, Third Edition. Hill education, Tenth Edition.
[6] 'Theory of machine' R. S. Kurmi, , S chand publication, 14 Edition.
[7] 'Metal Cutting and Tool Design' Ashok kumar singh, vayu education of india.Tenth Education.
[8] 'Design data handbook' K Mahadevan and K Balaveera Reddy, CBS publisher, Fourth Edition.
[9] 'Machine Design Data book' Dr. Sadhu Sing, Khanna Publishers, Tenth Edition
[10] 'On the Optimal Selection of Motors and Transmissions for Electromechanical and Robotic Systems' Siavash Rezazadeh and Jonathan W. Hurst, vol. 20, pp. 604-610.
[11] 'A Review Of The Functionalities Of Smart Walkers' Maria Martinsa,∗, Cristina Santosa, Anselmo Frizerab, Ramón Ceresc, Vol. 23, 2012
[12] 'Extension And Customization Of Self-Stability Control In Compliant Legged Systems' M. Ernst, H. Geyer, and R. Blickhan, vol. 7, no. 4, 046002, 2012.
[13] 'Failure of Screw Jack on Inclined Surface' Mr.U.N.Kolekar,Prof. Dr.Sarje S.H, Volume 4, Issue 7, July 2015
[14] 'Mechanical Engineering Design' Richard G Budynas, J. Keith Nisbett, Mc Graw
[15] 'Design and Fabrication of motorized automated Object lifting jack' Ivan Sunit Rout1, Dipti Ranjan Patra1, Sidhartha Sankar Padhi1, Jitendra Narayan Biswal1, Tushar Kanti Panda. Vol. 04, Issue 05 May. 2014.
[16] A text book of Machine Design R. S. Khurmi and J. K. Gupta, vol 4, 2008

**M 135**

# DESIGN AND ANALYSIS OF RADIATOR MOUNTING BRACKET

Akshaykumar magadum, Ganapati Chavan, Mohammedsaif Mullani, Vinayak Navalagi, Pranav Makote, Student ,Department of Mechanical Engineering, D.K.T.E.Society's Textile And Engineering Institute, Ichalkaranji.

**Abstract : The process of coping/ duplicating actual product or extracting design information from product which is already made and reproducing it in same manner using software's is called Reverse Engineering. But due to unavailability of equipments, measurements are taken manually with actual dimensions. The automotive radiator mounting systems are very important for vehicle performance. In earlier days radiator mounting devises where designed without doing actual vehicle analysis. Due to this the efficiency of vehicle was affected also the stresses induced were more. For frame support radiator mounting bracket is to be designed. Due to continue vibration and fatigue, the structural failure and high stressed are induced. So, investigation is done in structural analysis and its dynamic behavior. The need for light weight structural materials in automotive applications is increasing as the pressure for improvement in emissions and fuel economyincreases. The most effective way of increasing automobile mileage while decreasing emissions is to reduce vehicle weight. For this purpose we are designing radiator mounting device by reverse engineering. Radiator bracket is taken for study and model is developed in CATIAv5R20 and Meshing is done in Hyperworks and analysis is carried out using software Ansys.**

***Keywords:-*** *Radiator mounting device, Radiator bracket, CATIA, Hyperworks*

## INTRODUCTION:

As the name suggestes,"DESIGN AND ANALYSIS OF RADIATOR MOUNTING BRACKET." It is in this context, the development of engine bracket can make the engine capable of absorbing vibration. Automotive engine mounting system must satisfy the primary tasks such as engine movement, engine rigid-body dynamic behavior, and vibration isolation. The design and analysis of mounting bracket through use of Hyper mesh software to achieve the requirements for mounting system. Radiator is mostly mounted to the front sub frame and once installed in a vehicle, Radiator mounting has a significant task in decisive the vehicle ,vibration characteristics.The process of coping/ duplicating actual product or extracting design information from product which is already made and reproducing it in same manner using software's is called Reverse Engineering. But due to unavailability of equipments, measurements are taken manually with actual dimensions.In automotive, radiator is a base component of engine cooling system. It extracts heat from engine and keeps

engine surface temperature at optimum level for better engine efficiency. Radiator development consists of its size and design aspects. Size provides heat rejection area and its performance.

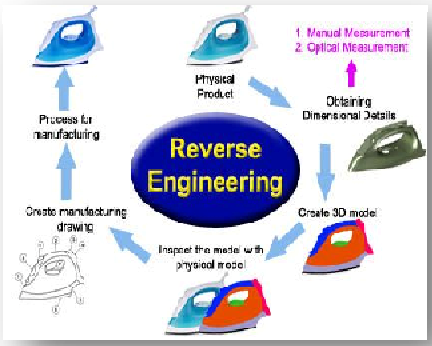


*Fig.1- Reverse engineering process chart*

Due to globalization and trade liberalization, manufacturing companies face tough competition from goods and services produced in lower wage economies. Countries in the West cannot compete against low wages and therefore depend on raising innovations and best practices to create better products. Reverse Engineering defined as ,"the basic concept of producing a part based on an original or physical model without the use of an engineering drawing".Reverse Engineering is also defined as: "Systematic evaluation of a product with the purpose of replication. This involves design of a new part, copy of an existing part, recovery of a damaged or broken part, improvement of model precision and inspection of a numerical model ". Reverse engineering is widely used in numerous applications such as manufacturing, industrial design and jewelry design and reproduction, dental surgery. For example new car is launched in the market; competing manufactures may buy one and disassemble it to learn how it was built and how it works. In some situations, such as automotive styling, designers give shape to their ideas by using clay, plaster, wood or foam rubber but a CAD model is needed to manufacture the part. As products become more organic in shape, designing in CAD becomes more challenging and there is no guarantee that the CAD representation will replicate the sculpted model exactly.

## LITERATURE REVIEW

Niranjan Singh et al. [1] from Model Institute of Engineering & Technology, Jammu , J & K studied the Reverse Engineering. Reverse engineering refers in creating a computer Aided Drafting (CAD) model from an available product, object, part etc. which can be used as tool for the Reverse engineering. The CAD model is obtained from scanning an existing part or product with the help of scanner. They study the concept of the Reverse engineering process, its Vital role in the engineering sector and modification of an existing part or product. They studied about the data capturing process, scanner used in reverse engineering, Point Processing phase and generation of surfaces using points cloud data.

Pawan S. Amrutkar et al. [2] from Sinhgad Academy of Engineering, university Pune studied on Design and Experimental variation of Automotive radiator. They studied the function of Radiator in the cooling system. Using E-NTU (Number Transfer Unit) they had designed the

radiator dimensions. For the purpose of stress Analysis FAE (Finite Element Analysis) has been done and some changes in design for making the structure robust and the objective is been achieved successfully of designing the radiator.

Aabhas Singhal et al. [3] from Nirma University Institute of technology Ahmadabad studied the reverse engineering. They studied the use of Reverse engineering process in numerous fields in the Information Technology. In this the Restructive Coding, Extract Abstraction and refining and Simplifying is done. They concluded that the reverse engineering is easy, less time consuming and applicable in numerous sectors or fields in engineering. Reverse engineering software is having advantages and used for better evolution.

Tejendrasinh S. Raol et al.[ 4] from R.C. Technical In statute, Ahmadabad studied the Reverse Engineering process. They studied the process of developing new design of products in shortening the time. They studied about developing a 3D design or model of an existing product by using Reverse engineering process. Reverse engineering is suitable for recovering of a broken part designing, duplicating or preparing a copy of existing product. Discussed about the process of Reverse Engineering i.e. Data capturing, Data segmentation and 3d CAD modeling. It is a rapid tooling technology for designing products. They Concluded that use of Reverse engineering process will speed up product realization process and reduce manufacturing cost.

Surabhi Chougule et al. [5] studied the development of correlated Model of the Radiator Assembly including the radiator Core. They studied about the generator heating problems and withdrawing is required of the heat by Ventilation and cooling system. They presented the work on Finite element Analysis of Radiator Core using the ANSYS software for Finite element model simulation work. From correlations it is observed that experimental test and global AVM modes of0 FE model match and concluded that it is safe to use rectangular solid block for Radiator Core.

Toure Ismael et al. [6] studied on Radiator Vibration Fatigue analysis. They studied about hoe the vibration affected the performance of radiator which leads to wear & tear of mounting bracket which further leads to noise creations. The they investigate how the noise could be reduced. They found out parameters that affected the radiator. Further they analyzed on random Vibration PSD Excitation curve, fatigue vibration analysis. They observed that the Radiator they designed meets international requirements of fatigue Vibration under automobile normal; working conditions.

## Proposed work

- **Location of Bracket Installation:-** The Radiator mount assembly includes a support member i.e mounting bracket. In

cars the mounting devices are secondary path of noise creations. The vehicle's structure at the mounting location is crucial in regard to noise transmission, durability and crash worthiness. Therefore the bracket must be designed to be as stiff as possible, Through the use of Computer Aided Engineering software's.

- There are three basic steps involved in Hyper mesh finite element Analysis

1. Preprocessing phase
2. Solution phase.
3. Post processing phase.

In the preprocessing module, Hypermesh typically uses a CAD representation of the physical model and breaks it down into small pieces called finite "elements". This process is called "meshing." The type of elements can be selected as per the requirement. The area is then discredited i.e. meshed in elements by using meshing or mapped meshing option provided by the package. Once the mesh is generated, the boundary conditions such as external forces, pressures, and displacement constraints are applied. This makes the model ready for the finite element analysis. In the solution step we have to solve a set of linear or nonlinear algebraic equations simultaneously to obtain nodal results. Which are displacements values at different nodes or temperature values at different nodes in a heat transfer problems

Post-Processing (Interpretation of Results) is used to create graphical displays that show the distribution of stresses, strains, deformations, and other aspects of the model. Interpretation of these post processed results is the key to identifying areas of potential concern (stress concentration in a model), areas of material waste (areas of the model bearing little or no load), or valuable information on other model performance characteristics (thermal, modal) that otherwise would not be known until a physical model were built and tested (prototype). The post-processing phase of Hyper mesh is where the most critical thinking must take place, where the user looks at the results, and compares results with what expected.

- FEA Preprocessing for the Mounting racket:- The pre-processing of the engine mounting bracket is down for the purpose of the dividing the problem into nodes and dements, developing equation for an element, applying boundary conditions, initial conditions and for applying loads. The information required for the pre-processing stage of the bracket is as follows,
- **Material properties:-** The values of Young's modulus, Poisson's ratio,

density, yield strength for Gray Cast Iron, aluminum and magnesium Alloy are taken from material library of the ANSYS. At this point only one material is selected at a time, which is sufficient to show that a change.

- **Mesh :-**A solid element mesh is required to be generated. For thin bodies, a different type of meshing approach is required. For engine mounting bracket part, we extracted and meshed the mid-surface using Hex Dominant Quadrilateral and Triangular elements for Gray Cast Iron, aluminum and magnesium alloy. The FE model is created for analysis using the hyper mesh & ANSYS work-bench software.

- **Loads:-**Specific values of load are implemented for a typical mounting bracket. The load is taken as 1000N which is considerable as the distributed weight of the engine is less than this value. This force is produced by Thrust. Load is applied at the three holes of the engine mounting bracket, which are connected to the engine structure with the help of rigid elements such as nut and bolts.

- **Constraints:-** The nodes around the bracket mounting holes have a rigid element connecting them to the centre of the hole which has of its degree of freedom fixed. The element which is used to fix engine mounting bracket and body of the vehicle is fixed and used as a rigid element. As the load data from ANSYS takes into account the bushes, no fixing bushes are modeled. The FE mesh together with the loads and constraints is made in the ANSYS meshing environment. The minimum and maximum are set, together with other mesh parameters such as element type and material. The selected object is ready for further analysis in the ANSYS environment.

- **Post Processing of the Engine Mounting Bracket:-** The acceptability of the design of the engine mounting bracket needs to be considered from the results of the analysis. The guidance for the modification of the bracket need to be available if the design is not considered to be acceptable. The acceptance and design modification criteria for the engine mounting bracket are as follows. Model acceptance criteria: The maximum Von-Misses stress must be less than the material yield strength for the duration of the component. The deflection is considered and the maximum Von-Misses stress must be less than the yield strength for abuse load case. Design modification criteria: The modifications are made if the design is not acceptable, such as increasing fillet, radii, increasing material thickness and altering material specifications. The output in the form of the stress value is generated by the commands from the ANSYS, when the analysis has been completed in the ANSYS. This output data in the form of figures is then checked for

## ACTUAL PART

Fig. 2- Actual part model of radiator bracket

## CATIA MODEL

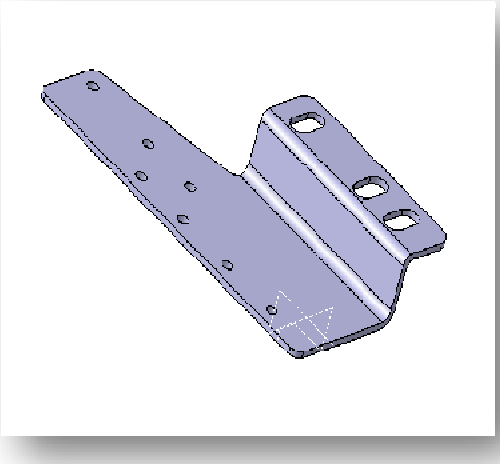

Fig.3 – CATIA model of radiator bracket

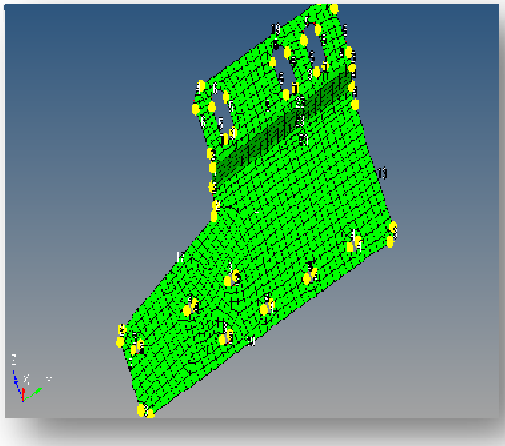

Fig.4-Component meshing

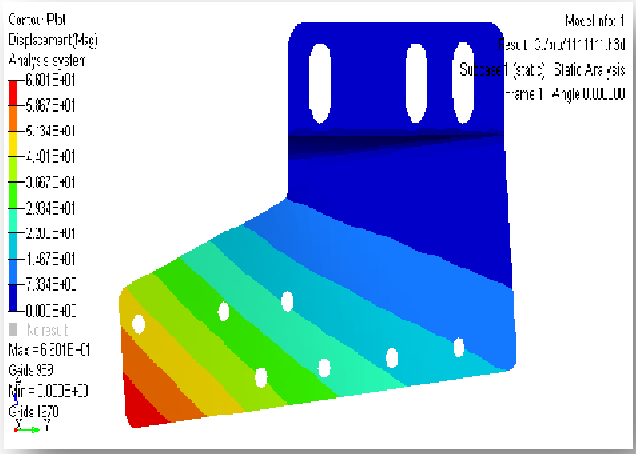


Fig.5-Component displacement plot.

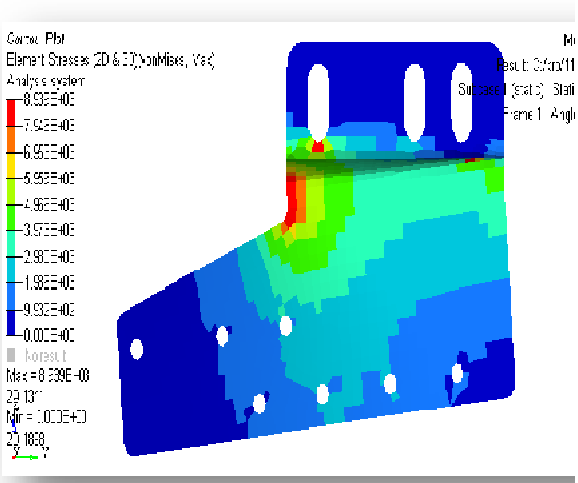

fig.6-Component stress plot.

determining the relevant information and compared with the acceptance criteria. Result Interpretation: From the results of the analysis the engineer required to understand the failure criteria for that particular component. For checking the analysis results in the ANSYS environment requires not only results data but might also requires information from design handbooks regarding materials, manufacturing methods etc. To check the suitability of the analysis results from the ANSYS environment the analyst will need to consider the following, The Design Failure Criteria: Maximum allowable deflection, maximum allowable stresses are required to be known and documented. For this purpose the value of the Von Misses stress is considered. There is also a requirement for recognizing the effect of the analysis on the engine mounting bracket due to load applied. The results of analysis are considered as a number of colored pictures, such as contoured plots of maximum stress. From these plots the design criterion can be relatively easily recognized and acted for the purpose of modification.

Young's Modulus – 1.1 e+11 N/m2

Poisson's Ratio – 0.28

Density – 7200 Kg/m3

Yield strength in tension & compression–2.4e+8N/m2&8.2e+8 N/m2

## Conclusions

- Reverse engineering is an easy system that creates the best structure with new accurate dimensions documentation and make it easily readable. By reviewing different research paper and by our work we came to conclusion that radiator mounting bracket is a small part though very much essential and important part to be studied.
- We conclude that by reducing the weight of bracket we can increase the fuel efficiency of engine.
- By using Hyper-works Software we came to know that by using different material the brackets can be designed which will have less weight, increase the life of bracket, strength of bracket increases.
- In manufacturing plant anyone part is worn or broken then there is no source of supply to repair it and henceforth the part must be replaced. So for reproducing that we have no drawing and time. In that case Reverse

Engineering Process is the best option to replace the worn or broken part

## REFERENCE

[1] Niranjan singh ,"Reverse Engineering - A General Review ," International journal of Advanced

[2] Engineering Research and studies, vol-2, pp. 2249-8974 (2012)

[3] Pawan S. Amrutkar, Sangram R. Patil, S.C. Shilwat ,"Automotive Radiator - Design and Experimental Validation," International journal of automobile E.ngineering research and development, vol- 3, pp.2277-4785 (2013).

[4] Aabhas Singhal, Shlok Gandhi,"Reverse Engineering ," International Nournal of computer application, vol- 108, pp. 0975-8887 (2014)

[5] Tejendrasinh S. ROl,"Reverse engineering - The review ," International journ of advance engineering and research development, vo.-3, pp.2348-4470 (2016)

[6] Surabhi chaougule , Dr.C.S.Pathak, Rahul.P. Mokhadkar,"Development ofcorrelatex model of the radiator assembly including radiator core and charge air cooler core of a genset," International Engineering research journal , page no- 184-189

[7] Toure Ismael, Buyun Sheng ," Journal of Electronics cooling and thermal control, 7,8-21 (2017)

**M 136**

# Groundnut Harvester

Pratiksha U. Pawar1, Omkar V. Pawar2, Shweta R. Kshirsagar3, Sohel U. Mujawar4
1,2,3,4 U. G. Student, Mechanical Engineering Department, DKTE's TEI, Ichalkaranji, Maharashtra.

**Abstract- Various inventions are carried out in the field of Agriculture, all over the world in order to reduce the labor work of farmers.GroundnutHarvester is mechanical device used for removing groundnut from plant. Design and Operation of Groundnut Harvester is very easy, does not required any skilled persons, requires less human effort and is very affordable for all farmers. It can also reduce labor cost to greater extent as only one person can easily handle the machine. Its operation and maintenance cost is very low. Groundnut Harvester have two brushes, which can easily separate the groundnut from plant and is placed one on right hand side and another on left hand side.**

***Keywords***-*Agriculture; Design; Efficient; Time saving; Groundnut harvester*

## I. INTRODUCTION

Agriculture forms the backbone of our country economy; about 55% of citizen is depending on agriculture. Thus developing our country means providing our farmers with more "Sophisticated" and "Advanced Tool" which would decreases overall time required for the task and the task will become more easy and convenient. Groundnut harvesting is last stage in farming which takes maximum time of farmer among all farming process. In India harvesting is generally done manually. Thus our intention is to provide farmer a "GROUNDNUT HARVESTER IN AGRICULTURAL APPROACH". This machine consists of simple mechanism make to run by a motor which will be economical to farmer and will take less time for harvesting operation.

## II. SPECIAL PURPOSE MACHINE

SPM are designed to perform only specific operations.

- They can produce any number of identical items.
- They are used in mass production.
- The rate of production in SPM is high.
- The cost of SPM is high.
- The cost of SPM can be justified if it is used for mass production.
- But the various units of SPM may be used in the construction of another SPM.
- SPM are not made in bulk but they are produced as per order or only in small quantity.E.g. Capstan Lathe, Turret Lathe, Gun Drilling Machine

## III. DESIGN

Design consists of application of scientific principles, technical information and imagination for development of new or improvised machine or mechanism to perform a specific function with maximum economy &efficiency .Hence a careful design approach has to be adopted. The total design work has been split up into two parts

- **System Design**
- **Mechanical Design**

System Design- System design mainly concerns the various physical constraints and ergonomics, space requirements, arrangement of various components on main frame at system, man + machine interactions, No. of controls, position of controls, working environment of machine, chances of failure, safety measures to be provided, servicing aids, ease of maintenance, scope of improvement, weight of machine from ground level, total weight of machine and a lot more. In system design we mainly concentrated on the following parameters: -

***1) System Selection Based on Physical Constraints***

While selecting any machine it must be checked whether it is going to be used in a large-scale industry or a small-scale industry. In our case it is to be used by a small-scale industry. So space is a major constrain. The system is to be very compact so that it can be adjusted to corner of a room. The mechanical design has direct norms with the system design. Hence the foremost job is to control the physical parameters, so that the distinctions obtained after mechanical design can be well fitted into that.

***2) Arrangement of Various Components***

Keeping into view the space restrictions the components should be laid such that their easy removal or servicing is possible. More over every component should be easily seen none should be hidden. Every possible space is utilized in component arrangements.

***3) Components of System***

As already stated the system should be compact enough so that it can be accommodated at a corner of a room. All the moving parts should be well closed & compact. A compact system design gives a high weighted structure which is desired.

***4) Man Machine Interaction***

The friendliness of a machine with the operator that is operating is an important criteria of design. It is the application of anatomical & psychological principles to solve problems arising from Man – Machine relationship. Following are some of the topics included in this section.

- Design of foot lever
- Energy expenditure in foot & hand operation
- Lighting condition of machine.

The losses incurred by owner in case of any failure is an important criteria of design. Factor safety while doing mechanical design is kept high so that there are less chances of failure. Moreover periodic maintenance is required to keep unit healthy.

***5) Servicing Facility***

The layout of components should be such that easy servicing is possible. Especially those components which require frequents servicing can be easily disassembled.

***6) Height of Machine from Ground***

For ease and comfort of operator the height of machine should be properly decided so that he may not get tired during operation. The machine should be slightly higher than the waist level, also enough clearance should be provided from the ground for cleaning purpose.

***7) Weight of Machine***

The total weight depends upon the selection of material components as well as the dimension of components. A higher weighted machine is difficult in transportation & in case of major breakdown, it is difficult to take it to workshop because of more weight. For designed parts detached design is done & distinctions thus obtained are compared to next highest dimensions which are readily available in market. This amplifies the assembly as well as postproduction servicing work. The various tolerances on the works are specified. The process charts are prepared and passed on to the manufacturing stage The parts which are to be purchased directly are selected from various catalogues & specified so that anybody can purchase the same from the retail shop with given specifications.

**Mechanical Design-**In mechanical design the components are listed down and stored on the basis of their procurement

**Designed Parts**

**Parts to be purchased**

For designed parts detached design is done & distinctions thus obtained are compared to next

highest dimensions which are readily available in market. This amplifies the assembly as well as postproduction servicing work. The various tolerances on the works are specified. The process charts are prepared and passed on to the manufacturing stage. The parts which are to be purchased directly are selected from various catalogues & specified so that anybody can purchase the same from the retail shop with given specifications.

## IV. CONSTRUCTION

**The Groundnut harvester machine consists of the following parts**

1. **Motor :**

Motor is a single phase AC motor of 185 watt i.e.; 0.25 Hp power, 1440 rpm.

Motor is mounted on the machine frame using motor mounting bracket. Motor carries the motor pulley mounted on the motor shaft.

2. **Main spindle(shaft)-1:**

Main spindle -1 is mounted in ball bearings on either end, and supports the driven gear at its center and brush holders at either ends.

3. **Main spindle( shaft) -2 :**

Main spindle -2 is mounted in ball bearings on either end, and supports the driven gear, reduction pulley at its center and brush holders at either ends.

4. **Brush holders :**

Brush holders are steel elements that hold the de-leafer brushes on them. The brush holders are mounted on the ends of the main spindle, and are provided with square flat ends for proper brush holding.

5. **Brushes** :

Brushes are of polymerized rubber, with array of bristles along the periphery for de-leafing action. Brushes have square bore to be mounted on the brush holders.

6. Pedestal Bearing :


Bearing housings are structural steel elements that house the ball bearings to support the main spindles.

It is also called Plummer block. Figure shows half sectional front view of the Plummer block. It consists of cast iron pedestal, phosphor bronze bushes or steps made in two halves and cast iron cap. A cap by means of two square headed bolts holds the halves of the steps together. The steps are provided with collars on either side in order to

prevent its axial movement. The snug in the bottom step, which fits into the corresponding hole in the body, prevents the rotation of the steps along with the shaft. This type of bearing can be placed anywhere along the shaft length. The main function of a rotating shaft is to transmit power from one end of the line to the other. It needs a good support to ensure stability and frictionless rotation.

**7. Gear train :**

Gear train comprises of two spur gears keyed to the main spindle. Driver gear is mounted on main spindle two along with reduction pulley whereas driven gear is mounted on main spindle one. Gear train drives either spindles in opposite directions.

**8. Frame :**

Frame is the structural member that supports the entire assembly of machine, made from MS square tube.

## V. WORKING

Motor of the machine drives the main spindle-2 by means of the gear drive. When motor is started the motor gear drives the reduction pulley on main spindle-2 by means of belt. Main spindle-2 carries the drive r gear which in turn rotates the driven gear on the main spindle -1 thus both shafts are driven in the opposite directions. Brushes that are mounted on the spindle ends also rotate in opposite directions.

Bunch of groundnut shrubs is to be inserted for removing groundnut between two opposite rotating brushes in axial direction i.e. along direction of spindle axis and is taken out in radial direction i.e. along direction of rotation of pulley. During this action the groundnut are plucked from the stem as they are held between bristles of the oppositely rotating brushes.

## VI. CONCLUSION

The work of the farmer is reduced to a greater extent and increases the efficiency of harvesting.

## VII. REFERENCES

[1] Elements of Workshop Technology.S.K.HajraChoudhary A.K. HajraChoudhary
[2] Machine Design .- R.S.Khurmi.
[3] Design Of Machine Elements.-V.B.Bhandari.
[4] Moayad B. Zaied, Ahmed M. El Naim, Mohammed H. Dahab, Afraa S. Mahgoub, “Development of powered groundnut harvester for small and medium holdings in north kordofan state in western sudan”,world journal of agricultural research, 2014, vol. 2, no. 3, 119-123.
[5] T. Bako, H. Bayero, A.M. Ezekiel, Performance “Evaluation of a Tractor Mounted Groundnuts
[6] Harvester” Innovative Systems Design and Engineering ISSN 2222-1727 (Paper) ISSN 2222-2871 (Online)Vol.6, No.9, 2015.
[7] Rajasekar.M ,Arunkumar.S ,Divakar.S ,Santhosh Kumar.R “Design fabrication and performance analysis of groundnut thresher” International Research Journal Of Engineering And Technology, (irjet) e-issn: 2395 - 0056 volume: 04 issue: 02 | feb -2017 www.irjet.net p-issn: 2395-0072

-

**M 137**

# Design and Modification of Involute Spur Gears for Tracing Path of Contact

N.Sasane1, P.Patil2, C.Palankar3, Prof.R.R.Kolhapure4
(1, 2 & 3) Students, 4th Professor
Department of Mechanical Engineering, Textile and Engineering Institute, Ichalkaranji, India
nnishigandhasasane36@gmail.com

**Abstract : Gear transmission is widely used in mechanical transmission system and acts an important role in automotive industry by consolidation of two rotating shafts. While elaborating a particular concept during meshing of two gears formation of path of contact taking place, which is practically difficult to understand. As on today very less research work has been carried out by the various researchers in this area and which is purely based on the theoretical one. So current research work is based on study and demonstration of involute spur gears and tracing the path of contact. The path of contact is the locus of point of contact between two mating teeth from the beginning of engagement to the end (CD). It is very important to understand the gear terminology which is useful in gear transmission because it obey the law of gearing. So for better understanding two involute spur gears has been meshed and path of contact traced out.**

***Key words**: Involute spur gears, Path of contact, Meshing, Law of gearing, Locus.*

## INTRODUCTION

Gearing is the special division of Mechanical Engineering concerned with the transmission of power & motion between the rotating shafts. A gear or cogwheel is a rotating machine part having cut teeth, or cogs, which mesh with another toothed part to transmit torque. Geared devices can change the speed, torque, and direction of a power source. The involute gear profile is the most commonly used system for gearing today, with cycloid gearing still used for some specialties such as clocks.[1] Sofound that when pair of teeth is in contact, there is maximum stress induced which results the pitting failure. Pitting is a surface fatigue failure resulting from repetition of high contact stress. The surface fatigue mechanism is not definitively understood. The contact affected zone, in the absence of surface sharing tractions, entertains compressive principal stresses. Rotary fatigue has its cracks grown at or near the surface in the presence of tensile stresses, which are associated with crack propagation ends to catastrophic failure. Because engineers had to design

Durable machinery before the surface fatigue phenomenon was understood in detail, they had taken the posture space of conducting tests, observing pits on the surface, & declaring.Efficiency of spur and helical gear systems hasbecome an
Increasingly important research topic as the fuel economy requirements for today's passenger vehicles and rotorcraft are More stringent, not only due to fuel cost, but also environmental concerns associated with energy utilization and air pollution. Improved gear system efficiency also results in less frictional heat generation within the gearbox, resulting in improvements in gear failure modes such as scoring and pitting, and lower-capacity lubrication systems.

The overall efficiency varies over the path of contact of the gear meshes ranging between 94% to 99.5%. There are other benefits to improving gear efficiency as well. Since the efficiency losses amount to additional heat generation within the gearbox, several gear failure modes including scoring and contact. Fatigue failures are directly impacted by the efficiency of the gear pair. Involute tooth profile has various advantages such as good transmission performance, convenient installation & low cost compared with traditional involute spur gears, asymmetric involute gears have larger

carrying capacity, smaller volume, lighter weight & better dynamic characteristics [2]. In involute gear design contact between a pair of gear teeth occurs at a single instantaneous point. Which is known as point of contact. [3] In order to design the involute gear there is one term is important known as the pressure angle. The pressure angle is the acute angle between the line of action and a normal to the line connecting the gear centers. The pressure angle of the gear varies according to the position on the involute shape, but pairs of gears must have the same pressure angle in order for the teeth to failure at an arbitrary projected area of hole, & they related this to the Hertzian contact pressure mesh properly, so specific portions of the involute must be matched. While any pressure angle can be manufactured, the most common stock gears have a 20° pressure angle, with 14½° and 25° pressure angle gears being much less common. Increasing the pressure angle increases the width of the base of the gear tooth, leading to greater strength and load carrying capacity. Decreasing the pressure angle provides lower backlash, smoother operation and less sensitivity to manufacturing errors. So it is better to go with 20° which provides all above advantages as well as neglect errors. [4]

The teeth of circular and involute crowned external spur gears are modeled for the same crowning magnitude. Based on the theory of gearing, mathematical model of tooth generation and meshing are presented. Effect of major performance characteristics of uncrowned spur gear teeth are studied at the pitch point and compared with longitudinally modified spur gear teeth. The results of three dimensional FEM analyses from ANSYS are presented. Contact ellipse patterns and other contact parameters are also studied to investigate the crowning effects. The gear wheel is a machine element that has intrigued many engineers because of numerous technological problems arises in a complete mesh cycle .In order to achieve the need for high load carrying capacity with reduced weight of gear drives but with increased strength in gear transmission, design, gear tooth stress analysis, tooth modifications and optimum design of gear drives are becoming major research area.

When a pair of teeth in action is generally subjected to two types of cyclic stresses: bending stresses inducing bending fatigue and contact stress causing contact fatigue. Both these types of stresses may not attain their maximum values at the same point of contact. However, combined action of both of them is the reason of failure of gear tooth leading to fracture at the root of a tooth under bending fatigue and surface failure, like pitting or flaking due to contact fatigue. These types of failures can be minimized by careful analysis of the problem during the design stage and creating proper tooth surface profile with proper manufacturing methods. The finite element method is capable of providing this information, but the time needed to create such a model is large. In order to reduce the modelling time, a pre-processor method that creates the geometry needed for a finitelement analysis may be used, such as that provided by Pro Engineer. It provides the novel knowledge of that, gear drives are one of the most widely used modes in power transmission system with the advantages of large power, high efficiency, and long service life. The involute tooth profile has various advantages such as good transmission performance, convenient installation, and low cost. [5] Compared with traditional involute spur gears, asymmetric involute gears have larger carrying capacity, smaller volume lighter weight, and better dynamic characteristics. So the asymmetric spur gear has significant potential applications in the fields of heavy load and high-speed gear transmission system. In the gear transmission process, it is not possible to have the mating gear enter contact in pure involute position because there would be sudden interference corresponding to the elastic deflection. Real meshing tooth profile of asymmetric spur gears will deviate from the ideal location under load and will cause transmission error and the change of load distribution.

## LITERATURE SURVEY

In this modification of spur gear was conducted according to rack cutter profile, different pressure angles and fillet radius accordingly. The geometric equation of the rack with curve conducted and equation will be formed for proper involute. Design and modification model can be adopted to carry out the subsequent mating analysis. Presented various constructions and dynamic analysis for involute spur gear where meshed elements are constructed without CAD geometric model. The research results indicates that the involute modification of the generated gear contributed to better transmission performance.

In this work the effect on strength of involute spur gear with change in the root fillet radius is studied. Here we get conclusion that the stress correction factor and the form factor increases with the increases in positive profile correction. In order to reduce modeling the preprocessor method may use. The effect on the strength of spur gear by changing radius of circular fillet is investigated and we got the value of deflection in the curvature of gear is more in the gear of more number of teeth.

To present experimental studies for the deflection and moments of a gear tooth to calculate deformation due to contact losses energy during meshing and loss in efficiency.

Applied the new methodology on FEM to analyze the contact stress and displacement of the line contact condition in spur gear. The analysis shows that the strain energy losses are highly depends on rotational speed. The rolling system loss was found and it depends on profile of contact of mating gear teeth and reduced with increased load.

This paper provides appropriate method to lead crowned spur gear in order to achieve the need for high load carry capacity with reduced weight of spur gear drives but increases strength in the transmission. To use three dimensional finite method to conduct surface contact stress and root bending stress calculation of pair of spur gear with modifying error, assembly error and tooth modification. Effect of crown radius in crowning is studied and amount of crowning can be

determined from the given face width or vice versa and it can be verified analytically and geometrically.

DESIGN & MODIFICATION OF INVOLUTE SPUR GEAR

From the standard values of the gear we cannot obtained the proper number of teeth to trace the path of contact. Hence we modified the values that will purely visualize the path of contact. By involute circle method (as shown in fig no 4) we draw involute gear of same modified dimensions. And with the help of drawing the gear was cut of acrylic sheet material. We select acrylic material for better transparency to view the path of contact line (as shown in fig no 1). As we rotate one gear the other gear will rotate & mating of two gears will starts along the line of action. Wherever the addendum cuts the line of action, region is the path of contact which will be located. (As shown in fig no 5)

The modified values are as follows:

- Addendum of the gear= 33cm
- Deddendum of the gear= 27.6cm
- Pitch circle diameter (pcd)=29cm
- Module= 6cm

GEAR TERMINOLOGY

**Pitch Circle:** Pitch circle is the apparent circle that two gears can be taken like smooth cylinders rolling without friction

**Addendum Circle:** Addendum circle is the outer most profile circle of a gear. Addendum is the radial distance between the pitch circle & the addendum circle.

**Dedendum Circle:** Dedendum circle is the inner most profile circle. Dedendum is the radial distance between the pitch circle & the dedendum circle.

**Clearance:** Clearance is the radial distance from toot the tooth to the bottom of the tooth space in the mating gear.

**Backlash**: Backlash is the tangential space between teeth of mating gears at pitch circles.

**Full Depth:** Full depth is sum of the addendum & the dedendum.

**Face Width:** Face width is the length of tooth parallel to axes.

**Diametral Pitch:** Diametral pitch is the number of teeth per unit volume.

**Module: Module:** (m) is the inverse of diametral pitch.

**Circular Pitch:** Circular pitch is the space in pitch circle used by each teeth.

**Gear Ratio:** Gear ratio is numbers of teeth o larger gear to smaller gear.

**Pressure Line:** Pressure line is the common normal at the point contact of mating gears along which the driving tooth exerts force on the driven tooth.

**Pressure Angle:** Pressure angle is the angle between the pressure line & common tangent to pitch circles. It is also called angle of obliquity. High pressure angle requires wider base & stronger teeth.

**Pitch Angle**: Pitch angle is the angle captured by tooth.

Contact ratio: Contact ratio is the angle of action & Pitch angle

**Path of Approach**: Path of approach is the distance along the pressure line traveled by the contact point from the point of engagement to the pitch point.

**Path of Recess:** Path of recess is the distance traveled along the pressure line by the contact point from the pitch point to the path of disengagement.

**Path of Contact:** Path of contact is the sum of path of approach & path of recess.

**Arc of Approach:** Arc of approach is the distance traveled by a point on either pitch circle of the two wheels rom the point of engagement to the pitch.

**Arc of Recess:** Arc of recess is the distance traveled by a point on either pith circle of the two wheels from the point to the point of disengagement.

**Arc of Contact:** Arc of contact is the distance traveled by a point on either pitch circle of the two wheels from the point to the period of contact of a pair of teeth.

**Angle of Action:** Angle of action is the angle turned by a gear during arc of contact.

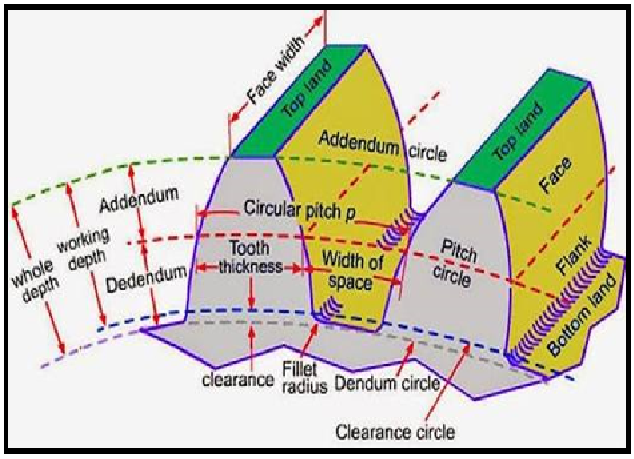


Fig No 2 Gear Terminology

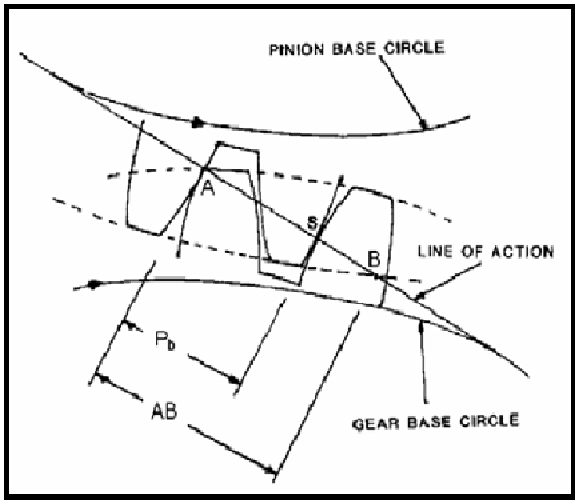


Fig.No. 3 Gear Tooth Action[6]

DRAWINGS & SKETECTHES

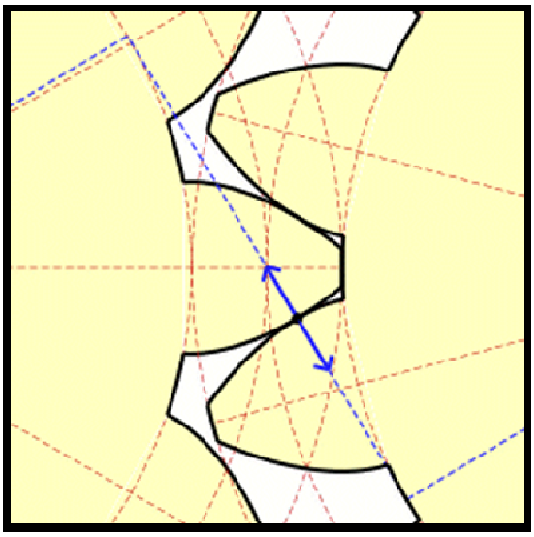

Fig No. 1Path of Contact

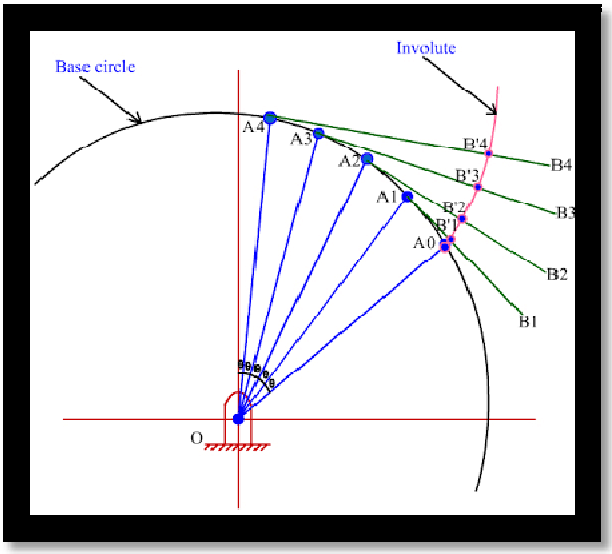


Fig No 4 Involute Circle Method


Fig No 5 Final Object View

## CONCLUSION

This research work was very useful to have a practical experience of manufacturing the demonstrative equipment. Constructing an involute gear is not an easy task which was best learning out of this research work. By giving a proper motion to one gear the other gear will rotate and hence the path of contact will be traced within the line of action which is straight line. Due to this research work the whole gear terminology can be understood because it obeys the law of gearing. The additional gain of knowledge was that because of line of action and path of contact, how power is transmitted from one gear to another is known.

## REFERENCES

[1] ***"Theory of Machines"*, R.S. Khurmi & J.K. Gupta, Chand** publications 4th edition.

[2] ***"Research on the Design & Modification of Asymmetric Spur Gear"*,Xiao he Deng , Lin Hua & Xinghul Han ,** Hindawi Publishing Corporation Mathematical Problems in Engineering , 2015.

[3] ***"Analysis of Gear Pair Contact To Predict Efficiency"*,R. Lahane & Dr. Jawale,** International Journal of Advances In Production & Mechanical Engineering,1,5, 2015.

[4] ***"Effect on Strength of Involute Spur Gear by Changing Fillet Radius Using FEA"*,Ashwini Joshi , Vijay Kumar Karma,** International Journal of Scientific & Engineering Research,2, 9, 2011.

[5] ***"Modelling & Contact Analysis of Crowned Spur Gear Teeth"*, Ramlingam Gurumurti, Subramaniam Shanmugam ,** Department of Mechanical Engineering National Institute of Technology ,18, 1, p. 65-78,2011.

[6] "***Contact Stress Analysis of Spur Gear Teeth Pair***", **Ali Hasan,** International Journal of Mechanical Engineering,3,10, 2009.

[7] "***Machine Design Element* ", V. B. Bhandari.**

**M 138**

# Development of Vertical Centrifugal Casting (VCC) Experimental Setup

Divya Bhoraniya and Pradip Kanzaria
Department of Mechanical Engineering
Marwadi Education Foundation Group of Institutions, India
bhoraniya.divya@gmail.com,
pradipkumar.kanzaria9950@marwadieducation.edu.in

Dhaval Anadkat and Amit Sata
Department of Mechanical Engineering
Marwadi Education Foundation Group of Institutions, India
dhaval.anadkat@marwadieducation.edu.in,
amit.sata@marwadieducation.edu.in

**Abstract: In the present work, progressive development of Vertical Centrifugal Casting (VCC) experimental setup with electric melting furnace (with bottom pouring) have been demonstrated. This setup has been developed to create a platform for performing various experiments by varying process parameters, and that will further help in identifying critical process parameters affecting the quality of centrifugal castings. This experimental setup permits variations in different process parameters including rotation of mould, angle of mould, and pouring temperature for producing hollow castings. This setup also facilitates interchangeability of different size of moulds. This VCC setup as well as furnace are designed for castings of low melting alloys such as Aluminum, Brass, Zinc, etc. It has been developed in such a way that, in future, it can be easily synchronized with various elements of Internet of Things (IoT), and provides real time monitoring as well as controlling of VCC. This experimental setup will really help in extending the applications of IoT to metal casting for better control.**

***Keywords:*** *Metal casting, Vertical Centrifugal Casting, Internet of Things.*

## INTRODUCTION

Vertical Centrifugal Casting (VCC) is a simple technique in foundry that consists pouring of molten metal into a rotating mould. The centrifugal force induced due to the rotation, causes the molten metal to be thrown against inner mould wall. The rotation is maintained until metal solidifies from outer diameter to inner diameter of the casting [1]. Following Figure 0.2 demonstrates the process step by step.

It is a significant casting process for manufacturing of cylindrical hollow parts those are relatively large in diameter and shorter in length [2]. The maximum length of the casting is generally two times the outer diameter of the casting (i.e. limited to a length to diameter i.e. L/D ratio about 2:1), that depends on final casting size and mould rotating speed [3]. Traditionally, axisymmetric and cylindrical components such as rings, hollow cylinders, tubes, pipes, etc. are made using this process. Also, it can be used for the production of solid or complex parts with a combination of other casting techniques [4]–[7].

While considering VCC process, various process variables such as rotational speed of mould, length, diameter and wall

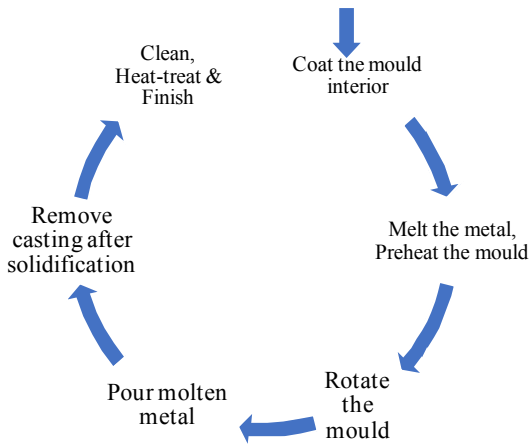


Figure 0.2 Vertical centrifugal casting process

thickness of casting, feeding of molten metal etc. are directly dependent on centrifugal forces and gravity acting on molten

metal. Various researchers have studied the filling process, metallurgical aspects and microstructure formulation in vertical centrifugal casting. That will help to control the process variables during casting process [8]–[12].

During the metal pouring and solidification, the high centrifugal force and the gravity are applied to the molten metal in rotating mould, that improves mechanical properties such as strength and fatigue in comparison to conventional gravity castings [5], [13]–[15]. Also, centrifugally cast components have a high degree of metallurgical homogeneous microstructures, and they do not exhibit the an-isotropic nature of mechanical properties apparent in rolled, welded or forged components [16],[17]. There are least chances of shrinkage at the exterior of the casting component due to directional solidification, as the flow of molten metal is continuous toward the external wall due to centrifugal force. Other impurities/defects such as Oxide formation, slag, bubbles etc. are mainly found on the inner wall of the component, as they are lighter than the metal itself. Impurities/defects generated on the inner wall can be removed by machining the component [18].

Figure 0.3 Examples of centrifugally cast products (courtesy: http://ccmcotulsa.com)

## DEVELOPMENT OF VCC SETUP

Development of VCC has been presented throughout this work. A simple equipment of minimum components, compact design, feasible construction and adaptable to various process variables were obtained, fulfilling the initial specifications and safety of the operator.

The operational principle of VCC is described as follows: The mould is attached to the adapter plate using three clamps. The adapter plate is attached to the shaft using M8 Allen bolt. The rotary motion of the Adapter plate is obtained through the shaft that is attached to a transmission system that includes a motor and the universal joint. The Adapter plate motion is stabilized by a ball bearing placed in the shaft enclosed by the metallic cover and it is attached to the base support structure. Molten metal is poured into the rotating mould from the bottom hole of the electric resistance furnace. Casting component is then obtained after solidification.

Following important components as shown in Figure 0.4Figure 0.2 have been considered in the development of the VCC setup:
1. Electric resistance furnace, 2. Metal mould and cover plate, 3. Mold clamping, 4. Adapter plate, 5. Motion transmission and supporting parts, 6. Motor and drive control unit, 7. Supporting frame structure.

The final design, which has been obtained after considering several iterations, is shown in Figure 0.6, where the main components of this setup can be identified. Some disadvantages are vibration due to tilting mechanism and direct assembly of the motor to the mould

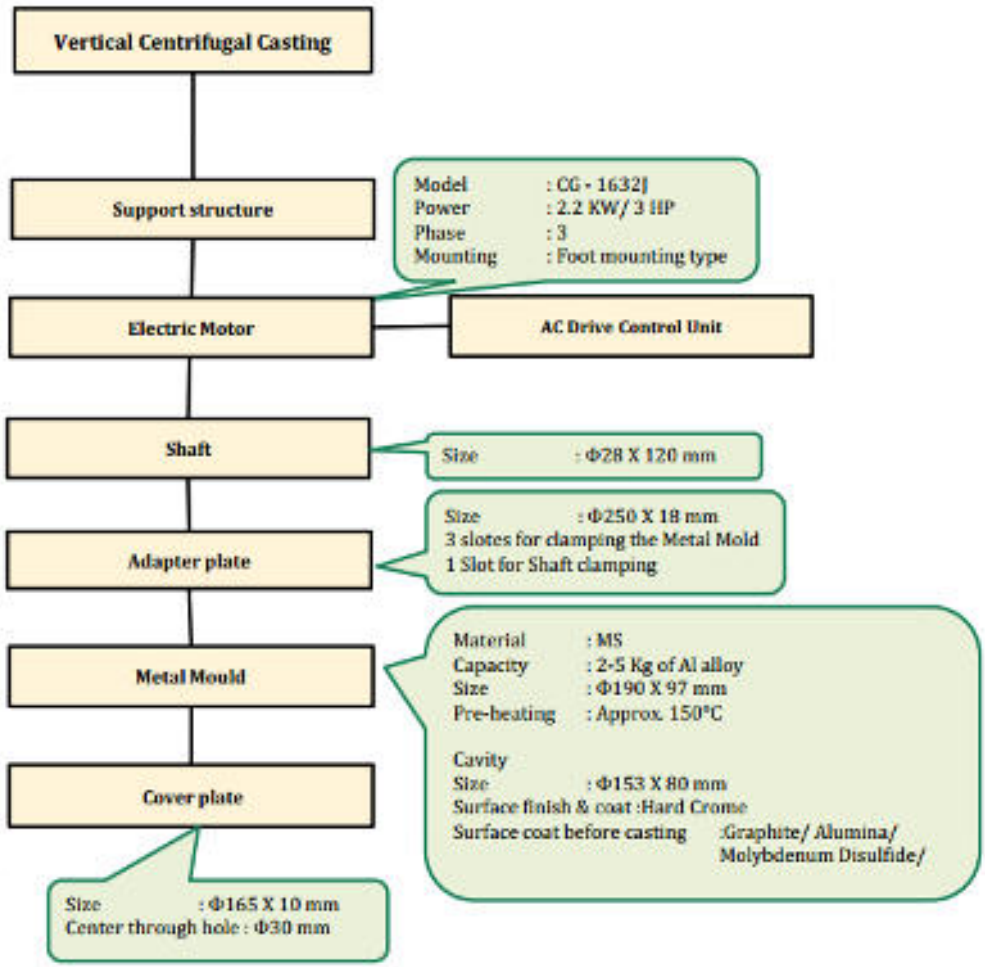


Figure 0.4 Development of VCC setup

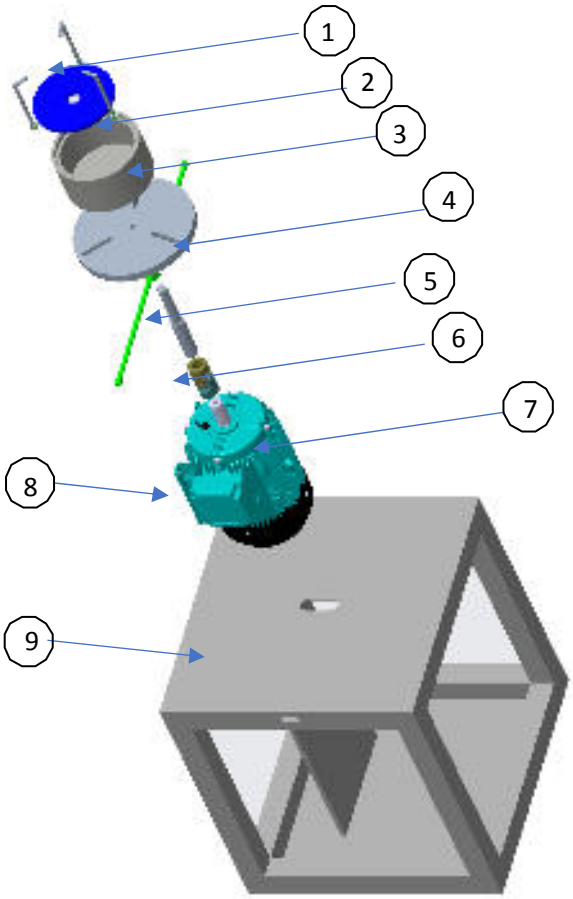


Figure 0.5 Exploded view of VCC setup

| No. | Component Name | Material | Description |
|---|---|---|---|
| 1 | Clamps | MS | To clamp mould and cover plate |
| 2 | Cover plate | MS | Prevent metal splashing out from mould |
| 3 | Mould | MS | Rotate and give shape to molten metal |
| 4 | Adapter plate | MS | For mounting different mould |
| 5 | Bearing & cover | -- | Support rotating shaft |
| 6 | Shaft | MS | Transmit the motion |
| 7 | Universal joint | CI | Guide the inclined motion |
| 8 | Electric Motor | CI Body | Provide appropriate rotational speed |
| 9 | Support structure | MS | Support different components |

Table 1 Bill of materials

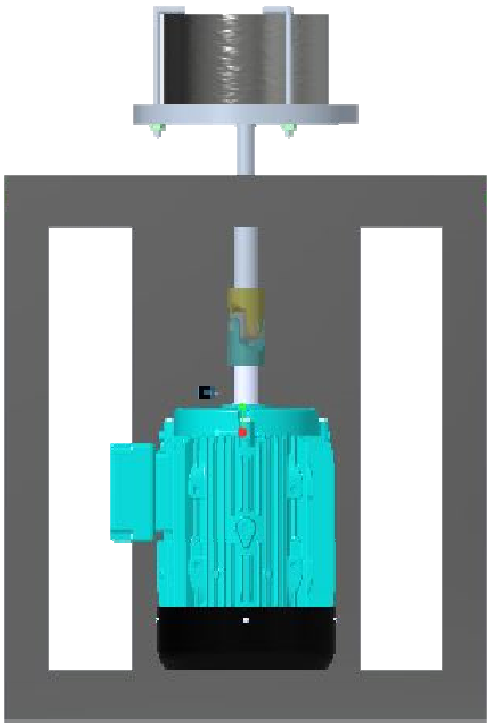

Figure 0.6 CAD model of VCC setup

**Components of VCC setup**

A short discussion on different components is given here.

**Melting Furnace** - A resistance furnace having bottom pouring facility has been designed for easy operation and safety of the operator. Also, it is designed with a movable stand to ensure the portability of equipment to pour the metal at various pouring stations. Since in resistance furnace, it burns no fuel, there are no disadvantages of the combustion or burning units. A household power supply of 220 V can be directly applied to this furnace. A typical range of melting capacity of the furnace is up to 1100°C. Nichrome wire used as a heating element inside the furnace. The heating coil is supported by muffle and insulated by ceramic wool inside the mild steel body. K-type thermocouples have been used to monitor the furnace temperature. There are three thermocouples were placed inside the mould, to collect the temperature data at different locations.

**Mould, Cover plate & Adapter Plate -** The mould, cover plate, and adapter plate have been made of mild steel. Mould has a capacity to cast 3 Kg Aluminium alloy component having an outer diameter of 150 mm and having L/D ratio is 1/2. The cover plate is used to prevent molten metal splashing out of the mould and to maintain the shape of the top layer of the casting component. Adapter plate supports the mould and transmits the rotary motion to it. Mould is attached to this plate having three slots for its fixation. Interchangeability of the mould is ensured by three slots machined on the adapter plate. Different size of moulds can be attached to the adapter plate as per requirement of casting size.

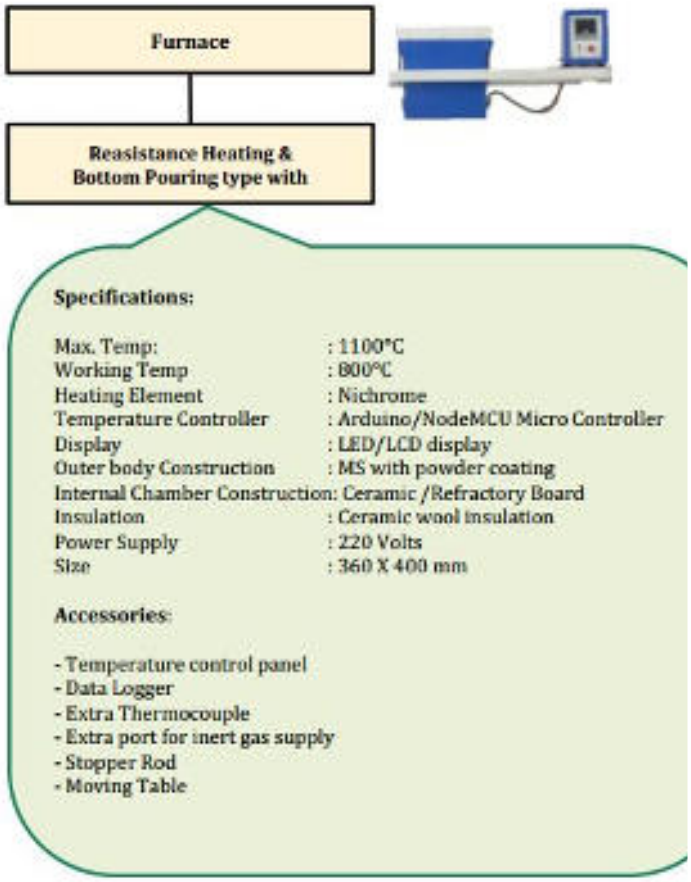


Figure 0.7 Furnace Specifications

**Transmission** – Rotary motion of the motor is transmitted to mould by union of following transmission parts: Universal joint, Bearing and main cylindrical shaft. The universal joint guide and movement transmission for the adapter plate. On the other hand, bearing support guarantees stability to the system during rotation. A 3-phase motor is used as transmission system to rotate the mould. A Drive control unit connected with motor is used to control the speed of the motor. Mould can be rotated by variable speed up 1500 rpm using this electric motor and drive control unit.

**Supporting structure** - The base supporting structure serves as support to the machine, safety of the operator, and equipment protection. The support structure is made of mild steel as shown in Figure 0.12.

Final assembly after manufacturing and assembling the above components is shown in following Figure 0.13.

Figure 0.8Mould and cover plate

Figure 0.9 Adapter Plate

Figure 0.10 3φ - Induction motor

Figure 0.11 AC Variable frequency drive control unit

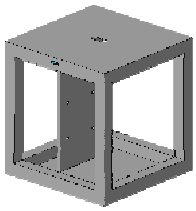

Figure 0.12Base support structure

Figure 0.13 Final Assembly of the VCC setup

In this work, setup is made for the casting of the LM-6 Aluminium alloy. Aluminium is a light metal which has much lower melting temperature than iron and other metals and alloys. So that it is easy for experimentation to cast the Aluminium and test for the results. The Centrifugal casting process can give an important contribution to improve the mechanical properties of alloy even if it is applied to alloys without reinforcement.

*A. Casting Process variables*

Following are the different process parameters should be examined during performing various experiments.

*1. Rotational speed of the mould*

The main factors affecting the speed of mould were discussed in the previous section. Effect of centrifugal force and parabolical bore shape due to the effect of gravity in centrifugal casting are used in speed selection of the mould. It is necessary to control the speed of mould to maintain the proper centrifugal pressure on molten metal in it. A drive control unit is used to control the motor speed.

*2. Angle of the Mould*

Tilting of the mould helps to minimize the parabolic error in VCC. Also, tilting of the mould ensures easy pouring of molten metal from the furnace. This tilting or inclined motion is achieved by the universal joint connected in the transmission system.

*3. Temperature control*

Pouring Temperature and solidification time affects the metallurgical structure of the casting component. At specific temperature range, casting

part is required to be held for some time inside the furnace. Then, temperature inside the mould should be maintained to reduce the defects in casting component and directional solidification. K-type thermocouples were used for temperature monitoring.

## FUTURE WORK ON VCC

In this work, VCC setup has been developed in such a way that IoT can be easily implemented to our setup. So, in the future different types of sensors can be attached to the machine. Using data collected from sensors, we can predict the defects in casting. These stored data, create a base for data analytics and then optimized parameters can be set for next production batch. Those adopting the concept will be more efficient and improves productivity. In this way, IoT can be implemented to the VCC setup for its real-time monitoring and control.

## ACKNOWLEDGMENT *(Heading 5)*

This research work is supported by Department of Science and Technology, Government of India funded project SMART FOUNDRY 2020.

## REFERENCES

[1] S. Hashmi, *Comprehensive Materials Processing*, vol. 1, no. 13. 2014.

[2] Y. V. Murty, "Vertical Centrifugal Casting," *ASM Handb.*, vol. 15:Casting, pp. 680–686, 2008.

[3] Gibson Centri Tech Limited, "Vertical axis machines."

[4] E. Seabra, J. Barbosa, and H. Puga, "Design and development of a centrifugal casting machine for pistons production," in *13th International Congress on Project Engineering*, pp. 401–408.

[5] G. Chirita, I. Stefanescu, J. Barbosa, H. Puga, D. Soares, and F. Silva, "On assessment of processing variables in vertical centrifugal casting technique," *Int. J. Cast Met. Res.*, pp. 382–389.

[6] E. Seabra, J. Basbosa, and H. Puga, "Design and developement of a centrifugal casting machine for pistons production," *Congr. Int. Ing. Proy.*, vol. XIII, 2009.

[7] D. M. Stefanescu, "ASM Handbook 9th ed.," *ASM Int.*, vol. 15, 1988.

[8] J. Zhang *et al.*, "Numerical simulation of filling process in vertical centrifugal casting based on projection-level set method," *Adv. Mater. Res.*, vol. 314–316, pp. 364–368, 2011.

[9] S. P. Wu, C. Y. Li, J. J. Guo, Y. Q. Su, X. Q. Lei, and H. Z. Fu, "Numerical simulation and experimental investigation of two filling methods in vertical centrifugal casting," *Trans. Nonferrous Met. Soc. China (English Ed.*, vol. 16, no. 5, pp. 1035–1040, 2006.

[10] W. S. Ping, L. D. Rong, G. J. Jie, L. C. Yun, S. Y. Qing, and F. H. Zhi, "Numerical simulation of microstructure evolution of Ti-6Al-4V alloy in vertical centrifugal casting," *Mater. Sci. Eng. A*, vol. 426, no. 1–2, pp. 240–249, 2006.

[11] A. Shailesh Rao, M. S. Tattimani, and S. S. Rao, "Effect of Rotational Speeds on the Cast Tube During Vertical Centrifugal Casting Process on Appearance, Microstructure, and Hardness Behavior for Al-2Si Alloy," *Metall. Mater. Trans. B Process Metall. Mater. Process. Sci.*, vol. 46, no. 2, pp. 793–799, 2015.

[12] Y. Sui, B. Li, A. Liu, J. Guo, and H. Fu, "Evolution jof microstructure in centrifugal cast Al-Cu alloy," *China Foundry*, vol. 7, no. 1, pp. 43–46, 2010.

[13] S. Wu, J. Guo, Y. Su, C. Zhao, and J. Jia, "Numerical simulation of off-centred porosity formation of TiAl-based alloy exhaust valve during vertical centrifugal casting," *Model. Simul. Mater. Sci. Eng.*, vol. 11, no. 4, pp. 599–608, 2003.

[14] S. G. Kim, T. Umeda, K. Murata, D. Sakurai, and M. Minami, "Development of New Container Manufacturing Process by Vertical Type Centrifugal Casting Method and its Solidification Analysis," *Adv. Mater. Res.*, vol. 4–5, pp. 307–312, 1997.

[15] F. S. Chirita, G., Stefanescu, I., Barbosa, J., Puga, H., Soares, D., Silva, "On the assessment of processing variables in a vertical centrifugal casting technique," *Int. J. Miner. Met. Res*, vol. 22, no. 5, pp. 382–389, 2009.

[16] K. Liu *et al.*, "Single step centrifugal casting TiAl automotive valves," in *Intermetallics*, 2005, vol. 13, no. 9, pp. 925–928.

[17] A. Halvaee and A. Talebi, "Effect of process variables on microstructure and segregation in centrifugal casting of C9220 alloy," *J Mater Proc Technol*, p. 118,123-7, 2001.

[18] M. P. Groover, *Fundamentals of modern manufacturing*, vol. 53, no. 9. 2013.

**M 141**

# Four Wheel Quadra Steering mechanisms for electrical vehicles

[1]Sourabh S. Jadhav, Sourabh S. Jadhav, Netraj V. Surnis, Arun R. Kamble
Mechanical Department DKTE'S TEI Ichalkaranji
[1]Sourabhjadhav40@gmail.com, +91 9970716626

**Abstract: Generally vehicles with two wheel steering system tend to under steer or in some cases over steer. In a typical front wheel steering system the rear wheel do not turn in and it affects efficiency of steering. So to overcome that problem four wheel steering system is necessary. In ferry (hilly) regions this under steer or over steer problem can be dangerous to human life, while under overall driving conditions it is uncomfortable for driver. To overcome this problem we use four wheel steering system. In four wheel steering the rear wheel turn with the front wheel and thus increases the efficiency of steering. Four wheel steering system increases the directional stability of the vehicle and driver would enjoy neutral steering. Quadra steering system works in following three phases: Negative phase, Neutral phase and Positive phase. This project consist negative phase of turning of wheels. It enables the car to be steered into tighter parking spaces. It makes the car more efficient and stable on cornering, easier and safer lanes change when on motorways. This steering system converts the rotational motion into the linear motion to turn the wheels.**

## 1. Introduction:

Four wheel steering is a method developed in automobile industry for the effective turning of the vehicle and to increase the manuverbility. In a typical front wheel steering system the rear wheels do not turn in the direction of the curve and thus curb on the efficiency of the steering. In four wheels steering the rear wheels turn with the front wheels thus increasing the efficiency of the vehicle. The direction of steering the rear wheels relative to the front wheels depends on the operating conditions. At low speed wheel movement is pronounced, so that rear wheels are steered in the opposite direction to that of front wheels. At high speed, when steering adjustments are subtle, the front wheels and the rear wheels turn in the same direction.

## 2. Literature review:

**1.** Four wheel steering system for Automobile:
Excellent manoeuvrability when the vehicle is cornering on a narrow, twisting road, the steering system must be able to turn the front wheels sharply yet easily and smoothly. Proper steering effort if nothing is done to prevent it, steering effort will be greater when the vehicle is stopped and will decrease as the speed of the vehicle increase. Therefore in order to obtain easier steering and better feel of the road, the steering should be made lighter at low speeds and heavier at high speeds.

**2.** Four Wheel Steering-A Review

Abhinav tikley,Mayur khangan
This paper reports on advanced steering system by using rack and pinion mechanism. This steering system converts the rotational motion into the linear motion to turn the wheels. Quadra system allows for rear wheel to be steered in opposite direction as in front wheel during low speed and in same direction during high speed. This allows the vehicle to turn in asignificantly smaller radius, sometimes judgmental for large trucks or vehicles with trailers.

**3.** Design and Fabrication of Four Wheel Steering Mechanism for Low Speeds
K J Yogesh, Mohd Rehan Desai, Mohammed Ali Fazal Shaikh, Praveen Gasthi : This paper comprises of the Design & Fabrication of a Four Wheel Steering mechanism which relatively is a new technology that improves manoeuvrability in trucks, cars, trailers & other four wheelers.
To keep the operation as simple as possible a computer controlled mechanism can be incorporated for the rear wheels. The rear wheels can be controlled in the following fundamental ways: At slow speeds the rear wheels turn in the opposite direction of the front wheels. This can reduce the turning radius approximately by 21%. At faster speeds on the highway, the rear wheels are made to turn in the same direction of the front wheels.

## 3. Methodology:

### 3.1 Phases of a quarter of steering:

In this type of steering system, we can steer a front wheel as well as the rear wheel of the vehicle simultaneously. This steering mainly includes two types of the steering: front wheel and rear wheel are steered in the same direction and are parallel to each other. This type of the system is very useful during lane changing. Front wheels are steered in the direction opposite to that of the rear wheel. This steering system reduces the space required by the vehicle during turning as compared to that of the two wheel steering system. Quadra steer provide full size vehicles greater ease or maneuverability while driving or tugging trailer at low speed, improved stability, handling and control at high speed. The present "four wheel steering" works mechanically with the help of linkages. This system utilizes manual manipulator to control and direct the articulation (left and right turning) of rare wheels. The system operates in three phases: negative, neutral and positive. At low speeds, rear wheels turn in opposite direction from the front wheel. This is negative phase. At the moderate Speed, the rear wheel remains straight or neutral. At a higher speed, rear wheel are in the positive phase turning in the same direction as the front wheels.
Negative phase:

Fig: 1. Negative phase

In this drive the axles both the front and the rear move in opposite direction relative to each other. As both the axle move in different directions the radius of curvature while turning reduces (Tim Gilles,2014).This means the vehicle will require less space for parking and this will be helpful in places where traffic and parking is major problem. It is mostly used at a speed from 10 km per hour to 40 km per hour. During this speed, it is useful in the turning at residential and parking areas. Turning is easier, as the front wheel moves with less steering wheel motion.
Neutral phase:

Fig: 2) Neutral Phase

In this drive only the front axle moves either in clockwise or anticlockwise direction and the rear wheel being unmoved. This is the drive that we see in the day-to-day life in all the four wheelers. It is generally used at moderate speed.

Positive phase:

Fig: 3. Positive phase

As the name suggests, in this drive both the axle front and rear move in the same direction relative to each other. This motion of the front and the rear axle helps Quadra steering system enabled vehicle to change the lane during highway driving. It is generally applied at high speed.

Fig: 4) Final Model

### 3.2Ackermann steering geometry:

A simple approximation to perfect Ackermann steering geometry may be generated by moving the steering pivot points inward so as to lay on a line drawn between the steering king spin and the centre of the rear axle. The steering pivot points are joined by a rigid bar called the tie rod which can also be part of the steering mechanism, in the form of a rack and pinion for instance. With perfect Ackermann, at any angle of steering, the centre point of all of the circles traced by all wheels will lie at a common point. Note that this may be difficult to arrange in practice with simple linkages, and designers are advised to draw or analyze their steering systems over the full range of steering angles.

Modern cars do not use *pure* ackermann steering, partly because it ignores important dynamic and compliant effects, but the principle is sound for low-speed maneuvers. Some racing cars use *reverse* Ackermann geometry to compensate for the large difference in single angle between the inner and outer front tyres while cornering at high speed. The use of such geometry helps reduce tyre temperatures during high-speed

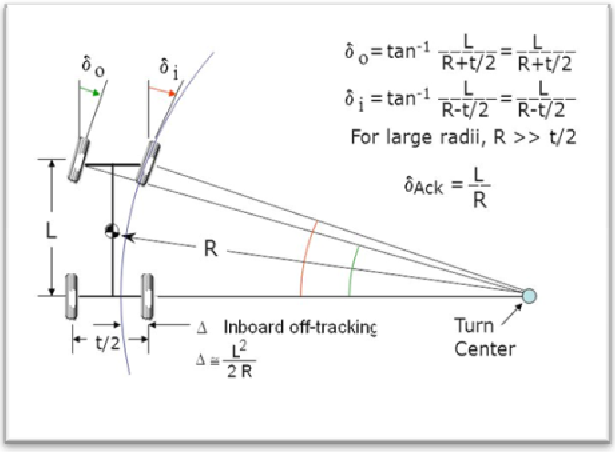


cornering but compromises performance in low-speed manoeuvres.

### 3.2Components used in four wheel steering system

1. Steering wheel.
2. Rack and pinion arrangement.
3. Front axle.
4. Rear axle.
5. Universal coupling.
6. Power transfer rod.

Advantages:

1. 4-WS offers 21% reduction in turning radius.
2. Stability of vehicle increases
3. The vehicle's straight line stability improved at high speeds.
4. The negative effect and irregularities of roads are minimised.
5. The vehicle is less likely to go in spin even driver take a sudden turn.
6. Conjunction with the real Steel Mod four wheel steering can significantly improve the vehicle handling at both moderate and low speeds.
7. Due to better handling and easier steering capability driver fatigue can be even over long drive.

Disadvantages

1. Significantly increasing work load for front tyres.
2. Large amount of left or right weight transfer seen in four wheels steer vehicle.
3. Uneven tyre wear of front and rear wheel

**Specifications:**

Distance between front and rear wheel centers = l36.5cm
Distance between centers of front wheel = 95cm
Distance between centers of rear wheel = 119cm
Distance between centers of two bolts of knuckles = 94cm
Distance between centers of rear wheel and frame = 12.5cm
Distance between center of bolt and frame = 1.5cm
Height of frame at back end = 29.5cm
Height of frame at front end = 16cm
Cross section area of frame = 38mm*38mm
Teeth on front sprocket =18 no. of teeth
Teeth on rear sprocket =44 no. of teeth
Total no. of steering wheel revolution = l.5 revolutions
Maximum angle in which front wheel can turn for one complete revolution of steering wheels = $17^0$
Maximum angle in which front wheels can turn for complete 1.5 revolution of steering wheels = $26.38^0$
Maximum angle in which rear wheels can turn for one complete revolution of steering wheels =$8^0$
Maximum angle in which rear wheels can turn for complete 1.5 revolution of steering wheels = $12^0$
Gear ratio of front and rear sprocket,
R = 18/44
= 0.409
Radius of rear sprocket = 8.5cm
Steering wheel ratio, R1 = 360/ 17
= 21.18
**T**urning Radius:
1. for inner wheels: 1.85 m.
2. for outer wheels: 2.71 m.

From above observations it is observed that the turning radius of wheels are reduced by 21% and also steering stability increased.

**Future scope:**

1. Farm vehicles an innovative feature of the steering linkage design is its ability to drive all four wheels using a single steering the trucks.
2. It provides one of the most economical steering systems for improved manual ability and drivers ease of access. With concept such as "ZERO TURN" drive as used in Tata Pixel and "360 turning" used in Jeep Hurricane

## 4. Conclusion:

As per the focus of the project we have created an innovative 4 wheel active steering mechanism which is feasible to manufacture, easy to install and highly efficient in achieving in steering geometry Some racing cars use *reverse* Ackermann geometry to compensate for the large difference in slip angle between the inner and outer front tyres while cornering at high speed. The use of such geometry helps reduce tyre temperatures during high-speed cornering but compromises performance in low-speed manoeuvres.

References

[1] Johnson Erik (2007), "2008 Infiniti G37 Sport Coupe-Suspension, Handling and Four-Wheel Steering".
[2] Kirpal Singh (2011), Automobile Engineering, 12th Edition, pp. 207-229, Standard Publication Distributors.
[3] Shibahata Y, Irie N, Itoh H and Nakamura K (1986), "The Development of an Experimental Four-Wheel–Steering Vehicle", SAE 860623.
[4] Thomas W Birch (1987), "Automotive Suspension and Steering System".
[5] Tim Gilles (2014), "Automotive ServiceInspection, Maintenance, Repair".
[6] Tom Murphy and Brian Corbett (2005), "Quadra Steer Off Course"
[7] Vlk F (2001), "Dynamika Motorových Vozidel", Nakladatelství a zasilatelství VLK, Brno

**M 144**

# Computer Aided Design and Rapid Prototyping: Enablers of Agile Product Development

Prof Gopinath H.Rathod
Dept of Mechanical Engineering
Basaveshwar Engineering College
Bagalkot, India
gopinath.rathod@gmail.com

Mr H.B.Goudar
Dept of Mechanical Engineering
Basaveshwar Engineering College
Bagalkot, India
goudarhbnh@gmail.com

***Abstract* : Modern organizations are forced to be quickresponsive so as to satisfy the varied dynamic customers' demands. The capabilities of this new manufacturing paradigm enable the modern proactive organizations to react quickly in accordance with the dynamic demands of the customers without compromising on quality, productivity, cost and time. Agile Manufacturing (AM) is the capability of manufacturing organizations to produce a variety of products within a short period of time in cost effective manner. Technology integrated AM research has taken place to a feeble extent. Traditional organizations keep implementing management related strategies like Total Quality Management (TQM), Total Productive Maintenance (TPM), ISO 9001:2000 certification, 5S, Kaizen etc. On the other hand those organizations have been slow in implementing technology integrated strategies like Computer Aided Design (CAD), Computer Aided Manufacturing (CAM), Computer Integrated Manufacturing (CIM), Rapid Prototyping (RP), Rapid Tooling (RT), Reverse Engineering (RE) and Information Technology (IT). In this context, the research work being reported in this paper was carried out to explore how CAD and RP technologies would enable such traditional organizations to achieve agility in product development and thereby sustaining in the globally competitive environment.**

***Keywords***—*Agile Manufacturing; Computer Aided Design; Manufacturing Technology; Design Engineering; Rotary switches*

## I. INTRODUCTION

The contemporary manufacturing organizations are facing the threat of increasing competition. The demands of the modern customers are dynamic and in varied volumes (Vinodh et al.,

The literature review also indicates that managerial biased AM research has taken place more when compared to technological biased AM research. There existed a research gap to utilize the technologies for enabling AM practices.

## II. LITERATURE REVIEW

The literature review has been conducted by referring to leading journals in databases such as Emerald insight, Science Direct and Springer link. The literature has been carried out from two perspectives, namely linkage between AM and modern technologies; linkage between design engineering and AM. The details are presented in the following subsections. Table 1 depicts the various technologies enabling AM

TABLE I. TECHNOLOGIES SUPPORTING AM

| Papers | Technologies supporting AM |
|---|---|
| Bhandarkar and Nagi [1] | CAD and CNC |
| Gunasekaran [5] | VE, CE, Rapid Prototyping tools, Electronic commerce |
| Gunasekaran [4] | VE, Supply chain, CE, IT |
| Maskell [6] | CAD, CAM and IT |
| Pan et al. [7] | World wide web |

2009). This situation has been forcing the manufacturing organizations to adopt newer manufacturing paradigms. AM has both managerial and technological enablers (Vinodh et al., 2008). An overview on literature indicates that some of the managerial enablers of AM include Total Quality Management (TQM), Total Productive Maintenance (TPM), Supply Chain Management (SCM), Kanban, Kaizen, Concurrent Engineering (CE) and 5S. On the other hand, the technological enablers of AM include Computer Aided Design (CAD), Computer Aided Manufacturing (CAM), Computer Numerical Control (CNC), Computer Aided Engineering (CAE), Computer Integrated Manufacturing (CIM), Rapid prototyping (RP), Rapid Tooling (RT), Reverse Engineering (RE), Information Technology (RE), World Wide Web (WWW) and Virtual Enterprise (VE).

It has been inferred from Table 1 that, all technologies are supported by electronically programmable utilities. This leads to an inference that product or process to be offered in agile The model, known as the Fuzzy Multi-attribute Utility, combines Multi-attribute Utility Theory and Fuzzy Logic

## III. CASE STUDY

### *A. Foundation of project*

The project has been carried at XYZ by consulting the Manager - Standards and Systems (hereafter referred to as Executive) and other executives of Design and Manufacturing Department. The product selected for conducting the case study is rotary switch. There existed a need for the case organization to develop new product designs of knob and handle. The exploded view of rotary switch is shown in Figure I. As shown in Figure I, rotary switch consists of an actuator, front assembly, mounting assembly and cover plate. The actuator in lower amperage switches is called 'knob'; whereas in high amperage switches it is known as 'handle'. These two actuating components are chosen as pilot products for performing the case study.

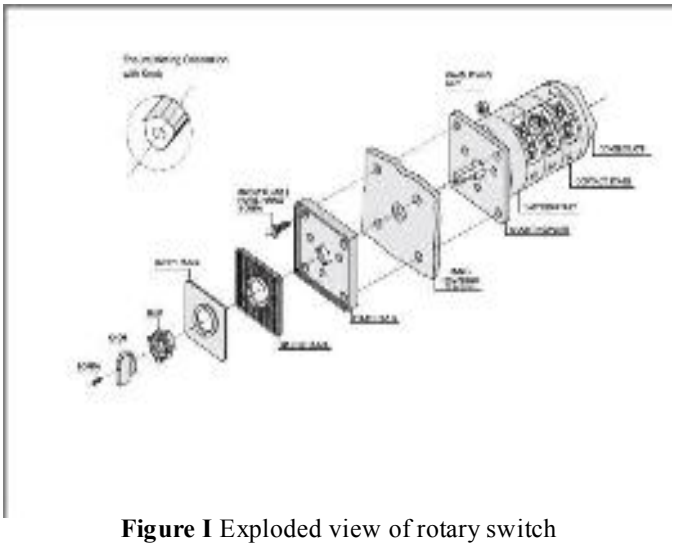

**Figure I** Exploded view of rotary switch

### *B. CAD models of existing components*

After collecting the 2D drawings of knobs and handles, the CAD models of existing knob and handle have been created using Pro/Engineer software package. The CAD models of existing components are shown in Figure II and Figure III.

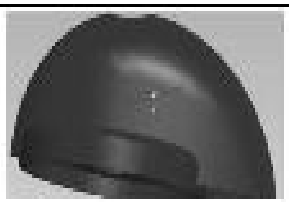

manner must be compatible for programming and reprogramming.

In the modern scenario, the term design engineering includes not only product design but also process, manufacturing system and service design. Borissova et al. (2006) have presented the concept of combinatorial process, equipment and plant design for AM. Pan et al. (2003) have presented a decision support system for the design of rolling bearing based on WWW. Chen (2006) has presented the concurrent Engineer-To-Order (ETO) concept. ETO is a Make-To-Order operation that starts with a product specification and finishes with delivery of a customised product. Zhao et al. (2006) have presented a cost estimation model for design and manufacturing of composite structures.

**Figure III** CAD model of existing handle

### *C. CAD modeling of new component designs*

After modeling the existing knob and handle designs, and in consultation with the Executive combined with creative and innovative ideas, five new knob and handle designs are made using Pro/Engineer software package. Such newly developed knobs and handles are shown in Figure IV and Figure V. The two dimensional drawings of all newly developed knob and handle designs have been retrieved. The new knob and handle designs have been proposed from the following perspectives: improved aesthetics, improved ergonomics, facilitation of torque application, improved gripness and better handling.

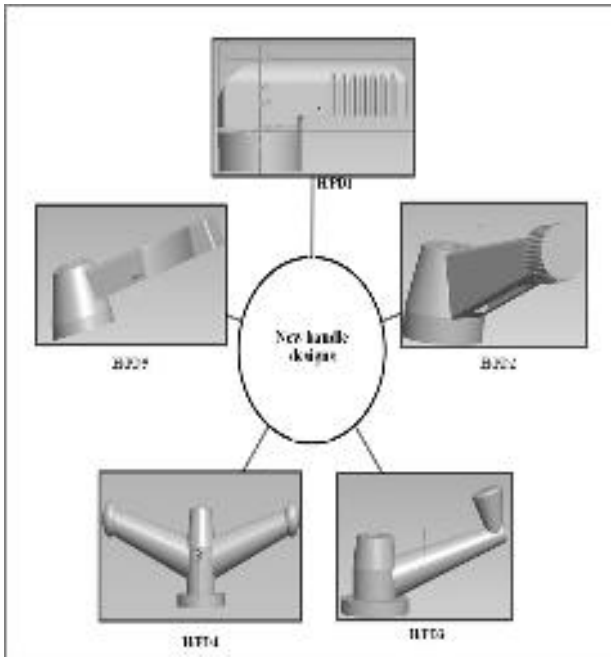

**Figure IV** Newly developed Handle designs

**Figure II** CAD model of existing knob

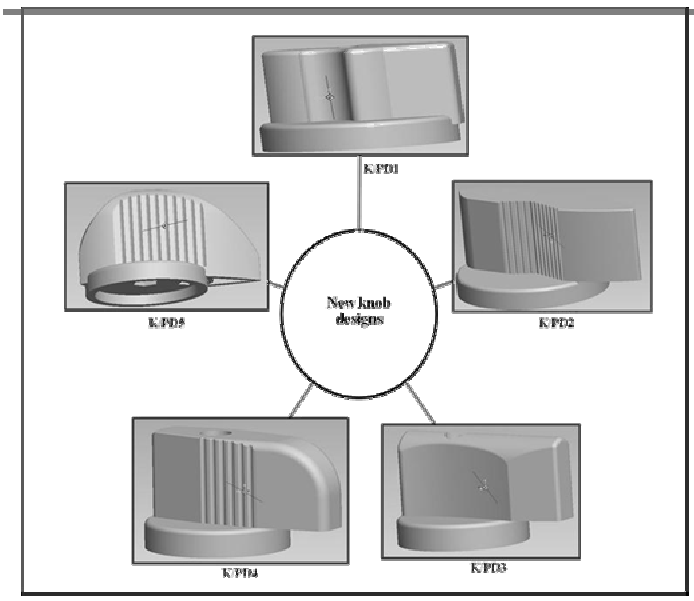


**Figure V** Newly developed Knob designsIV. RESULTS AND DISCUSSIONS

The new knob and handle designs have been proposed based on creativity and innovative thinking of the authors combined with the knowledge and experience of the Executive. All the above mentioned aspects such as creativity, innovativeness, knowledge and professional expertise are the enablers of AM. In order to practically validate the proposed designs, a questionnaire has been designed and the responses of the executives have been gathered.

## V. CONCLUSIONS

The experiences of conducting this implementation study proved the research hypothesis that CAD and RP technologies could act as agility enablers. This observation has been made by many AM researchers. The opinions of the experts working exclusively in the design and manufacturing of pumps also suggested the practical feasibility of integrating CAD and RP interfacing in a traditional manufacturing company for metamorphosing it to a status of being an AM enterprise. This kind of technology integration in AM field would enable the traditional manufacturing organizations to survive in the competitive environment in which unanticipated changes and demands have become a common phenomenon.

## REFERENCES

[1] Bhandarkar, M. P. and Nagi, R. (2000) 'STEP-based feature extraction from STEP geometry for Agile Manufacturing', Comp Ind Engg, Vol. 41, No. 1, pp. 3-24.

[2] Borissova, A., Fairweather, M. and Goltz, G. E. (2006) 'Combinatorial process and plant design for agile manufacture', Res Engg Des, Vol. 17, No. 1, pp. 1-12.

[3] Chen, C. S. (2006) ' Concurrent engineer-to-order operation in the manufacturing engineering contracting industries, International Journal of Industrial and Systems Engineering, Vol. 1, No. 1/2, pp. 37-58.

[4] Gunasekaran, A. (1998) 'Agile manufacturing: enablers and an implementation framework', International Journal of Production Research, Vol. 36, No. 5, pp.1223-1247.

[5] Gunasekaran, A. (1999) 'Agile manufacturing: A framework for research and development', International Journal of Production Economics, Vol. 62, No.1/2, pp. 87 – 105.

[6] Maskell, B. (2001) 'The age of agile manufacturing', Supply Chain Management International Journal, Vol. 6, No. 1, pp. 5-11.

[7] Pan, P. Y., Cheng, K. and Harrison, D. K. (2003) 'A Web-based agile system for rolling bearing design', Intg Manuf Sys, Vol. 14, No. 6, pp. 518-529.

[8] Vinodh, S., Sundararaj, G., Devadasan, S. R., Rajanayagam, D., Kuttalingam, D. and Meenakshisundaram, P. L. (2008) 'Enhancing competitiveness through CAD phase of Total Agile Design System', International Journal of Process Management: Benchmarking, Vol. 2, No. 3, pp. 197-220.

[9] Vinodh, S., Sundararaj, G., Devadasan, S. R. and Rajanayagam, D. (2009) 'TADS-ABC: a system for costing total agile design system', International Journal of Production Research, Vol. 47, No. 24, pp. 6941-6966.

[10] Zhao, W., Li, J., Zhang, C., Liang, Z. and Wang, B. (2006) 'Feature-based cost estimation for composite structures with Fuzzy Multi-Attribute Utility Theory', International Journal of Industrial and Systems Engineering, Vol. 1, No. 1/2, pp. 284-300.

**M 145**

# Modelling Of Drum Brake System

Kothavale Harshal Anil,Kamble Suraj Prakash, Hange Vaibhav Balkrushna, Kulkarni Amod Advait and Kamble Pratik Dattatray
Student, DKTES Textile And Engineering Institute,
Ichalkaranji

***Abstract*:A brake is a mechanical device which inhabits motion. A drum brake is a brake that uses friction caused by a set of shoes or pads that press against a rotating drum-shaped part called a brake drum .The brake drum is a critical component that experiences high temperatures and develop thermal stresses during application of brake. In addition, the application of shoe pressure gives rise to mechanical loads. Brakes in cars and trucks are safety parts Requirement not only in performance but also in comfort serviceability and working lifetime are high and rising. So in this project we design the model of drum brake and shoe in CATIA and then it will create a prototype of whole brake drum assemblyusing suitable material, so we can easily understand the working principle of brake drum system .In this model we are using cam actuator .For better working of brake drum system we can also use hydraulic actuator braking action.**

## INTRODUCTION

The history of modern automobile brake drum started out by the name Louis Renault in 1902. During that time, the main components of the brake drum which is the brake lining was build using the woven asbestos. This is actually one of the most efficient materials to be used as its characteristics of high dissipating heat. Levers, rods and cables are actually how the first drum brakes admitters. Nonetheless, further improvements have been done to the braking system and in the mid-1930s, oil pressure and pistons operated were introduced.

Going through the history of brake drum, the improvements has been progressing positively as in 1950s, a self-adjusting drum brakes was introduced. As before that, the shoes in drum brakes wear thinner and regular adjustment is a requirement. Furthering with the developments, it than continues its advancements by replacing it by brake disks and used on the front wheels of cars. As by now, most of the light weight cars actually use a brake disks on the front wheels, but brake drum on the rear part of the vehicle wheel. Due to the complex and difficult to design a disc brake for holding a parked car, drum brakes are the ones used for handbrakes. Moreover, to fit a drum handbrake inside a disc brake is easy and simultaneously functions both as service brake and handbrake.

## BASIC CONSTRUCTION

In mechanical drum brake system such as in two wheeler and auto rickshaw. The brake shoe are actuated by a cam, which is attached to brake linkage and pedal. When the brake pedal is pressed the cam turns causing the brake shoes to expand outwards and rub against the drum. The friction between the brake lines and the drum causes the drum to stop rotating thereby the wheel to stop. When the brake pedal is released the retracting spring the brake back to their original position causing a gap between them and the drum to again spin it freely.

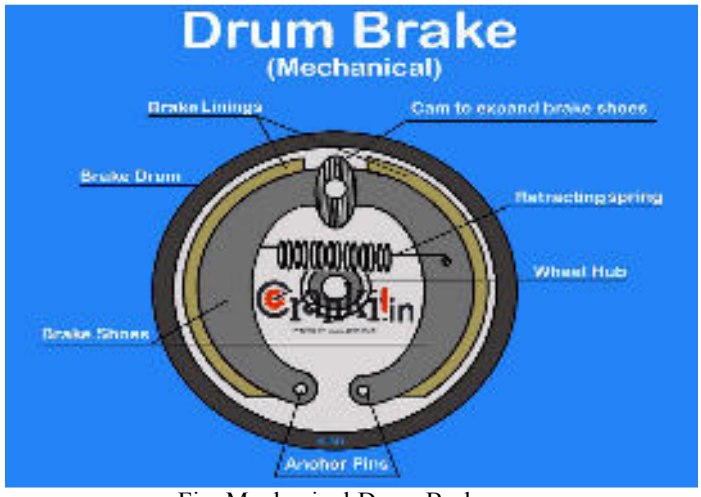


Fig. Mechanical Drum Brake

## WORKING PRINCIPLE

When the brakes are applied, brake fluid is forced under pressure from the master cylinder into the wheel cylinder, which in turn pushes the brake shoes into contact with the machined surface on the inside of the drum. This rubbing action reduces the rotation of the brake drum, which is coupled to the wheel. Hence the speed of the vehicle is reduced. When the pressure is released, return springs pull the shoes back to their rest position

*CAD MODEL*

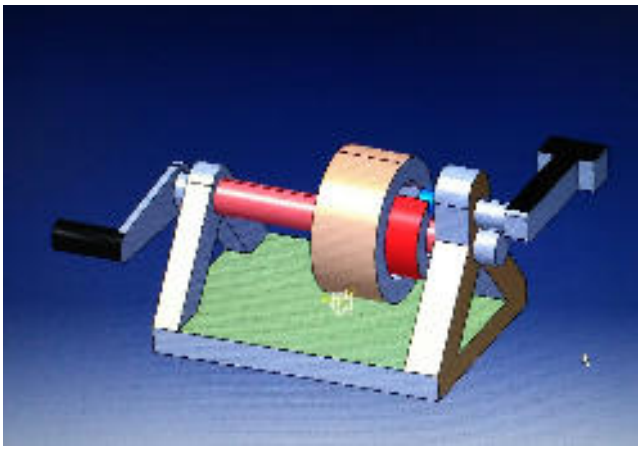

*IV.COMPONENTS*

The drum brake system consists of following components;

1)Backing plate

The backing plate provides a base for the other components. The back plate also increases the rigidity of whole set-up, supports the housing, and protects it from foreign materials like dust and other road debris. It absorbs the torque from the braking action, and that is why back plate is also called the "Torque Plate". Since all braking operations exert pressure on the backing plate, it must be strong and wear-resistant.

2) Brake drum

The brake drum is generally made of a special type of cast iron that is heat-conductive and wear-resistant. It rotates with the wheel and axle. When adriver applies the brakes, thelining pushes radially against the inner surface of the drum, and the friction slows or stops rotation of the wheel and axle, and thus the vehicle stops.

3) Brake shoes

Brake shoes are typically made of two pieces of steel welded together. The friction material is either riveted to the lining table or attached with adhesive. The crescent-shaped piece is called the Web and contains holes and slots in different shapes for return springs, hold-down hardware, parking brake linkage and self-adjusting components. All the application force of the wheel cylinder is applied through the web to the lining table and brake lining. Each brake assembly has two shoes, a primary and secondary. The primary shoe is located toward the front of the vehicle and has the lining positioned differently from the secondary shoe. The two shoes are interchangeable, so close inspection for any variation is important.

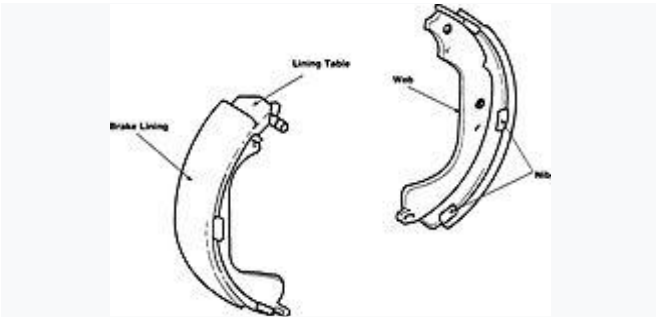


4) Actuator

In order to apply brake actuator is used. It provides the outward movement of shoes in the brake drum. There are several types of actuator like cam operated, hydraulic operated, pneumatic operated actuators.

## HYDRAULIC BRAKES VS TRADITIONALBRAKES

Hydraulic brakes have been around on most car models since the early 1930s, with combination brake systems added to cars in the mid-1960s. Combination systems combine drum brakes with hydraulic brakes to offer backup braking support in case the vehicle's hydraulic system fails. Many modern vehicles feature solely hydraulic disc brakes because of their proven effectiveness in safety testing.

Hydraulic brakes have advantages over traditional brakes. Hydraulic brakes are more efficient than most brakes when coming to a complete stop. Hydraulics also offer better cost economically and space compared to other types of brakes.

BENEFITS OF HYDRAULIC BRAKES

Hydraulic disc brakes dissipate heat thoroughly and distribute heat more evenly than traditional brakes, which means that hydraulic brakes are more likely to last longer. This cause is due to brake fluid that resists heat and compression in a hydraulic system. The final results increase safety in vehicles and hydraulic disc braking systems.

Hydraulic brakes are also one of the most accessible systems to repair due to the readily available disc brake parts. Hydraulic brakes are regarded as sealed off closed systems because they do not lose fluid when functioning correctly. Therefore, you should only see leaks when the brake system is damaged.

MECHANICAL BRAKE LONGEVITY

Mechanical brakes absorb energy and act by generating frictional forces are two surfaces cause friction against each other. The stopping power of a mechanical brake largely depends on the surface area of frictional surfaces as well as on the actuation force that's applied. The wear and friction caused by the working surface areas are quite severe. Thus, the longevity of a brake between maintenance depends heavily on the type of material used to line the pad or shoe.

BENEFITS OF MECHANICAL BRAKES

What is important to keep in mind is that both hydraulic and mechanical brake systems are going to bring the vehicle to a stop; the mechanical brake just does it more efficiently. With mechanical brakes, a tensioned steel cable activates pistons that make the brake pads compress against the rotor.

Advantages of Mechanical Brakes:

More straightforward to set up and maintain mechanically
Less expensive than hydraulic disc brakes
Get Mechanical Brakes and Hydraulic Brakes At Knott Brake

No matter what solution is right for your industry, Knott Brake can provide it for you. We offer both mechanical and hydraulic brakes. Companies around the world trust our custom braking solutions, and you can be sure our brakes are up for the job at hand. Whether you are looking for disk brakes, drum brakes, or any other braking solution, you will find it right here. Contact Knott Brake today for custom braking solutions!

ADVANTAGES

1. The maintenance is easier.

Drum brakes have an all-in-one, enclosed design with most components being held in place by spring tension. This makes maintenance simpler and more affordable. For example, if you want to replace a set of shoes, you just have to pry the springs in the braking system loose using a brake tool. This will effectively pry the whole braking assembly apart. Then you can easily replace the shoes, reconnect the springs and brackets, then put the drum back on. This can be done in less than 10 minutes, requiring less labor and time, and in effect, requiring less expenses.

2. Production and purchase costs are cheaper.

Some vehicle manufacturers prefer to use drum brakes since they are more cost-efficient compared to disc brakes. And since the production of the car costs less, the selling price of the vehicle can also be less, making it more affordable and attractive to potential buyers.

3. You can use them with disc brakes.

If you need to keep your car expenses to a minimum but want to improve the performance and security of your vehicle, then you can continue to use drum brakes for the rear part of your wheels and change to disc brakes for the front.

DISADVANTAGES

1. It can collect water.

Because it has an enclosed design, when the brake cavity gets wet due to rain, floods, or driving over a puddle, the water cannot be expelled right away. The collected water can reduce the frictional properties of the braking system, and this can be dangerous because the vehicle has a decreased stopping ability.

2. IT EXPERIENCES BRAKE FADE FASTER.

When driving downhill, making repeated harsh stops, or during panic stops, the drum and brake linings develop a lot of heat. This heat reduces the amount of friction between the shoe and drum, so the braking system of the car won't be as effective as it should. Even if the driver would put additional pressure on the brake, it won't improve the stopping ability of the vehicle due to brake fade.

3. It heats up more quickly.

As mentioned in the first disadvantage, drum brakes have an enclosed design. Because of this, the amount of air that enters the braking system is limited, reducing the cooling

inside. Heat must then be dissipated through the backing plate and brake drum. As a result, the radius of the drum increases more than the radius of the brake shoe, creating a shift in pressure between the linings and drum. The stopping ability of the car is reduced by about 20 percent due to the change in pressure distribution between the drum and linings.

## REFERENCES


[1] V .Hima Kiran Vithal "Analysis of brake fade in Drum Brakes"AE(FT-2008)

[2] Akshat Sharma, Amit Kumar Marwah "Braking Systems: Past, Present& Future" March (2013)

[3] Anup Kumar and R. Sabarish "Structural and Thermal Analysis of Brake Drum" Middle-East Journal of Scientific Research 20 (6): 715-719, (2014).

[4] Sourav Das, Ameenur Rehman Siddiqui, Vishvendra Bartaria "Evaluation Of Aluminum Alloy Brake Drum For Automobile Application" International journal of scientific & technology research volume 2, issue (11, November 2013).
Ibrahim Ahmed1, Yasser Fatouh1, Wael Aly2 "A parametric FE modeling of brake for non-linear analysis" (2014).

[5] P. Ioannidis, P.C Brooks, D.C Barton "Drum Brake Contact Analysis and its Influence on Squeal Noise Prediction" 2003-01-3348(2003)

[6] Nouby M. Ghazaly, 2mostafa M. Makrahy "Experimental Investigation Of Drum Brake Performance For Passenger Car"OCT(2014).

[7] Yi Zhang, Hu Zhang, and Chao Lu "Study on Parameter Optimization Design of Drum Brake Based on Hybrid Cellular Multiobjective Genetic Algorith

**M 147**

# Effect of Injection Pressure on the Compression Ignition Engine Fuelled with Mahua Biodiesel

Santosh Bhuimbar

Department of Mechanical Engineering
GSIT, Karwar
Karnataka, India
bhuimbar@gmail.com
Praveen Harari
Department of Mechanical Engineering
SGMCOE, Mahagaon
Maharashtra, India
hararipraveen@gmail.com

***Abstract*—In the present study an experimental work had been carried out to analyze the performance and combustion characteristics of B20 blend of Mahua biodiesel by varying injection pressure. The engine tests are conducted on Kirloskar 5.2 kW 4-stroke single cylinder 1500 rpm water cooled direct injection diesel engine with eddy current dynamometer with standard injection timing 23°bTDC was maintained constant throughout the experiment. Three different injection pressures such as 210 bar, 230 bar, 250 bar varied to analyze the performance characteristics. From the test results, it could be observed that among three different injection pressures 230 bar injection pressure gives higher thermal efficiency and lower fuel consumption.**

***Keywords*—*Compression Ignition; Injection Pressure; Performance; Mahua Biodiesel***

## INTRODUCTION

Increasing petroleum prices, increasing threat to the environment from exhaust emissions and global warming have generated interest in developing alternative non-petroleum fuels for engines. The use of vegetable oil in engines is not a recent innovation. In the present scenario, oil has become a finite resource and its price tends to increase exponentially, as its reserves are fast depleting [1]. Lenin et al. [1] studied the performance characteristics of diesel engine using Mahua Biodiesel and found that there was an increase in brake thermal efficiency of the diesel with fuel blends of Mahua biodiesel. The Mahua B50 gives higher brake thermal efficiency than the diesel fuel at all load conditions. At full load condition the brake thermal efficiency of the biodiesel blend B25 was lower than that of standard diesel. At low load condition the specific fuel consumption of fuel blends B25 was lower than that of diesel. At full load condition the specific fuel consumption of the fuel blends B25 and B50 was higher than the diesel fuel. The specific fuel consumption decreases with the increase of injection pressure. Pugazhvadivu et al. [2] studied the diesel engine using Mahua Biodiesel and found that the engine thermal efficiency was lowered when it was running with Mahua oil. The maximum thermal efficiency using Mahua oil was 20% as against 28% with diesel at 75% load. The thermal efficiency was improved with preheated Mahua oil. The maximum thermal efficiency (22.8%) was obtained at full load using preheated Mahua oil. Navadagi et al. [3] studied the compression ignition engine with various blends of Mahua Biodiesel and found that Brake specific fuel consumption increased with the increase in concentration of Mahua oil in diesel at all operating loads. Brake thermal efficiency decreased with the increase in concentration of

Mahua oil in diesel at all operating range of loads in comparison with pure diesel. Concentration of Mahua oil up to 20%, there was no significant decrease in brake thermal efficiency. Solaimuthu et al. [4] studied the direct injection diesel engine using Mahua biodiesel and found that the 22° bTDC of static injection timing gives lowest CO2 (% by volume) as compared to all other static injection timings. Among the blends, the B100 gives highest percentage of reduction in CO of 44.78 at full load condition of the engine. The 22° bTDC of static injection timing gives lowest Smoke Density (HSU) as compared to all other static injection timings. The 22° bTDC of static injection timing gives lowest hydrocarbon as compared to all other timings for both fuels. The 22° bTDC of static injection timing gives lowest NOx (ppm) as compared to all other injection timings for both fuels. Himangshu et al. [5] studied the emissions of neat Mahua biodiesel using Urea-SCR and found that carbon monoxide emission is greatly reduced with the addition of Mahua oil methyl ester to diesel. The variation of $CO_2$ using neat Mahua biodiesel is increasing trend with the increase in load. The NOx emission recorded using neat Mahua biodiesel is nearly 0.5% more than the emission recorded using Diesel.

## II. TRANSESTERIFICATION REACTION

It is most commonly used and important method to reduce the viscosity of vegetable oils. In this process triglyceride reacts with three molecules of alcohol in the presence of a catalyst producing a mixture of fatty acids, alkyl ester and glycerol. The process of removal of all the glycerol and the fatty acids from the vegetable oil in the presence of a catalyst is called esterification. The parameter such as temperature, molar ratio and catalyst concentration that affect the transesterification of raw oil were optimized initially. The transesterification set up houses 2 L Capacity, round bottom flask provided with three necks that was placed in a water container for heating the oil. A heater with a temperature regulator was placed in the round bottom flask. A high speed motor with a magnetic stirrer was used for vigorous mixing of the oil. In the transesterification process triglycerides of raw oil reacts with methyl alcohol in the presence of catalyst (NaOH) to produce a fatty acid ester and glycerol. In this process 1000 g raw oil, 230 g methanol and 8 g sodium hydroxide pellets were placed in the round bottom flask. The contents were heated to 70°C and stirred vigorously for one hour to promote ester formation. The mixture was next transferred to a separating funnel and allowed to settle under gravity overnight. The upper layer in the separating funnel consists of ester whist the lower layer is glycerol which was removed .The separated ester with 250 g hot water and allowed to settle under gravity for 24 hours. Water washing separates residual fatty acids and catalyst and these were removed using a separating funnel. Finally the moisture from the ester was removed by adding silica gel crystals.

## III. PROPERTIES OF FUELS

Table-1. Properties of fuels

| Properties | B0 | B20 |
|---|---|---|
| Density (kg/m$^3$) | 824 | 845 |
| Kinematic Viscosity at 40°C (cSt) | 3.52 | 4.22 |
| Flash Point (°C) | 53 | 83 |
| Fire Point (°C) | 59 | 92 |
| Calorific Value (MJ/kg) | 42.19 | 40.92 |

## IV. EXPERIMENTAL SETUP

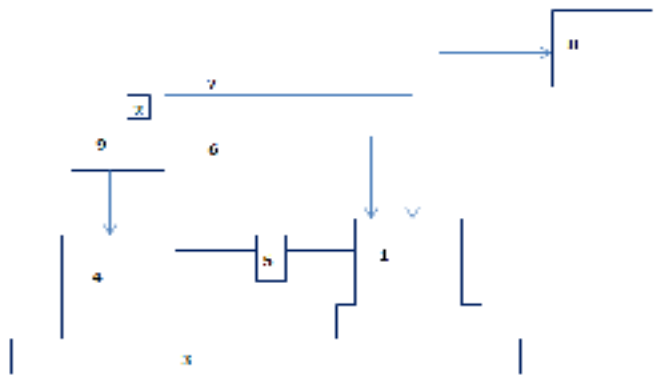

Fig-1. Experimental Setup

1) Diesel engine
2) Burette for fuel measurement
3) Base
4) Dynamometer
5) Coupling
6) Air supply line
7) Fuel supply line
8) Exhaust gas analyzer
9) Control panel

A single cylinder, direct injection, four-stroke, water cooled, Compression Ignition (CI) engine is used in the experimental study. The fuel flow rate was measured by noting down the time taken for the consumption of a known quantity of fuel (10cc) from a burette. The viscosity of raw as well as esterified oil was measured by red wood viscometer, density by hydrometer, calorific value by bomb calorimeter, flash and fire point by open cup method. Initially, before starting experimental tests, the engine was made to run under ideal condition as warm up phase and then the tests were conducted. The engine was started and allowed to warm-up for about 10 minutes. The engine was tested under five discrete part load conditions i.e. 20%, 40%, 60%, 80% and 100%.

## V. ENGINE PARAMETERS

Table-2. Engine parameters

| Engine Parameter | Specifications |
|---|---|
| Engine Type | Kirloskar |
| No. of Strokes | 4 |
| No. of Cylinders | 1 |
| Type of Cooling | Water Cooling |
| Type of Injection | Direct Injection |
| Bore | 87.5 mm |
| Stroke | 110 mm |
| Compression Ratio | 17.5:1 |
| Rated Power | 5.2 kW |
| Rated Speed | 1500 rpm |
| Injection Pressure | 210 bar |
| Injection Timing | 23° BTDC |

## VI. RESULTS AND DISCUSSION

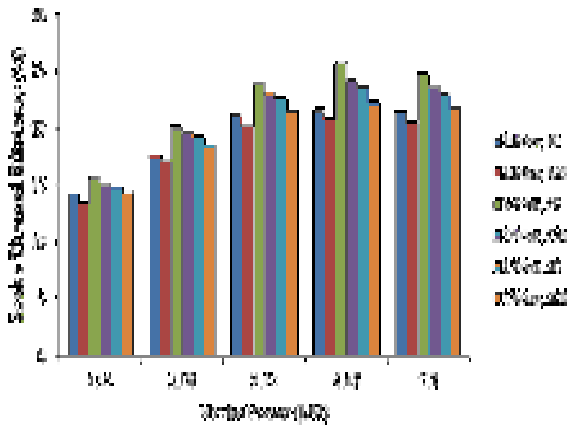

Fig 2. Variation of Brake Thermal Efficiency with Brake Power

Fig 2. shows variation of BTE with BP for different injection pressures. Among B0 and B20 blends the B0 blend gives higher BTE because of higher calorific value of the B0 blend. Among different injection pressures tested 230 bar gives the higher BTE because with the increase in injection pressure from 210 bar to 230 bar there is fine atomization of fuel so that there is better mixing of fuel and air and hence BTE increases. Again if injection pressure increases from 230 bar to 250 bar then there is decrease in BTE. This is due to the fact that, with increase in injection pressure beyond the limit not only fuel droplet size decreases but also momentum of the fuel droplets increases. These droplets impinged on the cylinder wall and hence fuel consumption increases and it leads to lower BTE.

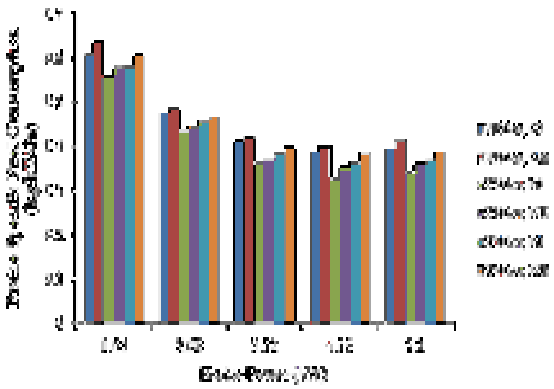

Fig 3. Variation of Brake Specific Fuel Consumption with Brake Power

Fig 3. shows variation of BSFC with BP for different injection pressures. Among B0 and B20 blends the B0 blend gives lower BSFC because of higher calorific value of the B0 blend. Among different injection pressures tested 230 bar gives the lower BSFC because with the increase in injection pressure from 210 bar to 230 bar there is fine atomization of fuel so that there is better mixing of fuel and air and hence BSFC decreases. Again if injection pressure increases from 230 bar to 250 bar then there is increase in BSFC. This is due to the fact that, with increase in injection pressure beyond the limit not only fuel droplet size decreases but also momentum of the fuel droplets increases. These droplets impinged on the cylinder wall and hence BSFC increases.

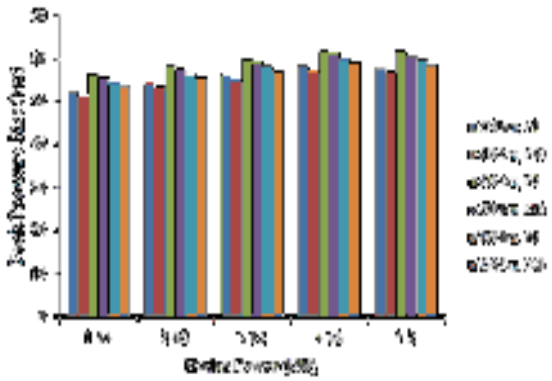

Fig 4. Variation of Peak Pressure Rise with Brake Power

Fig 4. shows variation of PPR with BP for different injection pressures. Among B0 and B20 blends the B0 blend gives higher PPR because of higher calorific value of the B0 blend. Among different injection pressures tested 230 bar gives the higher PPR because with the increase in injection pressure from 210 bar to 230 bar there is fine atomization of fuel so that there is better mixing of fuel and air and hence PPR increases. Again if injection pressure increases from 230 bar to 250 bar then there is decrease in PPR. This is due to the fact that, with increase in injection pressure beyond the limit not only fuel droplet size decreases but also momentum of the fuel droplets increases. These droplets impinged on the cylinder wall and hence PPR decreases.

## VII. CONCLUSION

The Brake Thermal Efficiency of 230 bar Injection Pressure was found to be higher compared to 210 bar and 230 bar. Brake Specific Fuel Consumption of 230 bar Injection Pressure was found to be lower compared to 210 bar and 230 bar. The Peak Pressure Rise of 230 bar Injection Pressure was found to be higher compared to 210 bar and 230 bar.

## REFERENCES


[1] Lenin, Ravi, Thyagarajan, "Performance Characteristics of a Diesel Engine Using Mahua Biodiesel as Alternate Fuel", Iranica Journal of Energy and Environment, 136-141, 2013.

[2] Pugazhvadivu, Sankaranarayanan, "Experimental studies on a diesel engine using mahua oil as fuel", Indian Journal of Science and Technology, 3, 787-791, 2010.

[3] Navindgi, Dutta, Sudheer, " Performance of a CI Engine with Different Blends of Mahua (Madhuca Longifolia) Biodiesel under Varying Operating Conditions, International Journal of Engineering and Technology, 2(7), 1251-1255, 2012.

[4] Solaimuthu, Vetrivel, Subbarayan, "A Study of DI Diesel Engine using Mahua Biodiesel and Petro-Diesel", IOSR Journal of Engineering, 4(6), 1-4, 2014.

[5] Himangshu, Veeresh, "An Experimental Investigation on Emissions of Neat Biodiesel Using Urea-SCR", International Journal of Scientific and Technology Research, 2(8), 39-44, 2013.

[6] Jawalkar, Mahantesh, Jagadish, Merawade, Navindgi, "Performance and Emission Characteristics of Mahua and Linseed Biodiesel Operated at Varying Injection Pressures on CI Engine, International Journal of Modern Engineering Research, 2(3), 1142-1149, 2012.

[7] Singh, Kumar, "Experimental Investigation on the Performance and Emission Characteristics of Mahua Biodiesel in Single Cylinder DI Engine", International Journal of Engineering Science Invention, 3(6), 30-37, 2014.

[8] Lakshmikanth, Arunkumar, "Mahua Oil Biodiesel Blends as Alternate Fuel in Diesel Engine", International Journal of Scientific Research, 2(10), 2013.

[9] Lakshmikanth, Thajudeen, Santhanakrishnan, Arunkumar, "Performance and Emission Characteristics of Mahua Oil Biodiesel on a Compression Ignition Engine, "International Journal of Engineering Research and Technology, 2(10), 530-533, 2013.

[10] Santhanakrishnan, Vijayaraj, Arumugam, Lakshmikanth, Arunkumar, "Performance and Emission Characteristics of $Al_2O_3$ Coated LHR Engine Operated with Mahua Oil Biodiesel Blend", International Journal of Research in Engineering and Technology, 2(11), 25-28, 2013.

**M 148**

# A comprehensive study on Sustainable Manufacturing System by developing an axiomatic modelling

Mr Ramesh Karjol
Dept of Mechanical Engineering
Basaveshwar Engineering College
Bagalkot, India
Rameshkarjol999999@gmail.com

Prof Gopinath H.Rathod
Dept of Mechanical Engineering
Basaveshwar Engineering College
Bagalkot, India
gopinath.rathod@gmail.com

***Abstract* : Sustainability has been regarded as an importantconcept for survival in the contemporary scenario. Modern design engineers are in need of approaches for creating environmentally friendlier products. The research on axiomatic design in the field of Sustainable Manufacturing (SM) is found to be feeble. In this context, this project work reports an axiomatic model of sustainable production system design using process variables. A hierarchical structure has been developed to model the design process of sustainable production system composed of functional requirements, design parameters, process variables. In the theory of axiomatic design, Process Variables are created by mapping the Design Parameters in the process domain. This article serves as an efficient guideline for the design process to clarify the tools, methods and resources of designing sustainable production system of an Indian modular switches manufacturing organization. After the development of axiomatic model of sustainable manufacturing system, the evaluation indexes are developed and quantified. The study has contributed to the development of sustainable production system and thereby ensuring the improvements from environmental, economic and social perspectives.**

***Keywords:*** *Sustainable Manufacturing; Axiomatic Design, Manufacturing Systems Design*

## I. INTRODUCTION

Environmental friendly design is a comprehensive, holistic approach for creating products and systems that are environmentally benign, socially equitable and economically viable. The practical aspects of sustainable design involves minimal material usage, improved material choices, design for ease of disassembly, product reuse, minimal energy consumption, manufacture without producing hazardous waste and usage of clean technologies. The general features of production system includes comprehensiveness to consider all aspects such as simple to use, efficient, versatile, perspective, analytical, powerful, multi-dimensional, programmable, practice-oriented, applicable for design evaluation etc [4]. Axiomatic Design (AD) is an innovative method for solving the design problems in a rational manner. It provides an efficient framework to guide the designers through the design process and reduce much of waste associated with trial anderror method. In this context, this paper reports a research in which AD methodology is used to model the design process of a sustainable manufacturing system composed of Functional Requirements (FRs), Design Parameters (DPs), and Process Variables (PVs). The uniqueness of this research study is that it has contributed an axiomatic model of sustainable manufacturing system which has not been attempted by early researchers. It systematically model the sustainable system composed of FRs, DPs and PVs in an effective manner. In the case of product, PVs represent the process design whereas in the case of production system PVs mean the tools, methods and resources required for implementing a sustainable system [4]. As inferred from Figure 1, the customer needs are translated as hierarchical structure of FRs in functional domain. FRs represents the role of design objectives satisfied with the corresponding hierarchical structure of DPs in the physical domain. Proper selection of PVs in process domain allows the achievement of DPs. In order to satisfy the mapping between the four domains, two axioms must be satisfied: first axiom is independent axiom, which maintains the independence of FRs; second axiom is the information axiom which is used to minimize the information content of design. If the overall relationship is to fulfill the independent axiom, every component of FR-DP-PV relationship must be uncoupled.

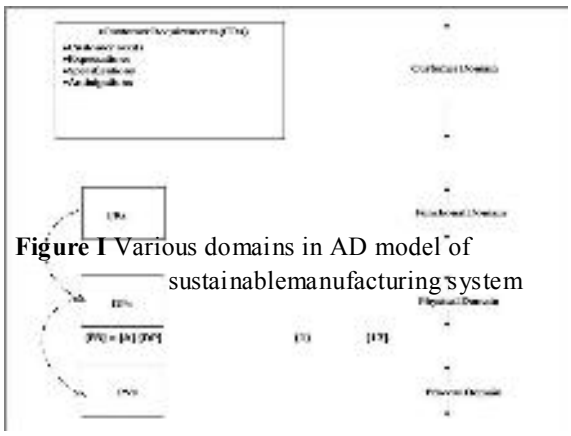

**Figure 1** Various domains in AD model of sustainablemanufacturing system

## LITERATURE REVIEW

The literature has been reviewed from the context of sustainability assessment, sustainability indicators and axiomatic design applications in the field of manufacturing. Benedetto and Klemes [7] have presented an 'Environmental Performance Strategy Map' for LCA to analyze environmental impacts on a wide perspective with reference to a product system and the related environmental and economic impacts. Krozer and Vis [9] has proposed a LCA as quantitative tool for assessment of environmental impacts of products and services. Gehin et al. [10] have mentioned that the contemporary challenge is to is to assess which ''product EoL process'' would be profitable for an enterprise given the business model in place. Choi et al. [15] have developed an assessment methodology on the basis of the 'material balance' of a process and the relationship amongst different processes. Dyllick and Hockerts [16] have developed the six criteria aiming for corporate sustainability to satisfy: eco-efficiency, socio-efficiency, eco-effectiveness, socio-effectiveness, sufficiency and ecological equity as a contribution to the ongoing conceptual development of corporate sustainability. Hutchins and Sutherland [19] have reviewed the metrics, indicators, and frameworks of social impacts and initiatives relative to their ability to evaluate the social sustainability of supply chains. Brown [22] has developed a systematic approach of teaching how the engineer can critically evaluate designs. Mourao [23] have shown how AD allows for perceiving the relationships between each product and the related manufacturing processes. An example is used to describe how ADs information axiom could be applied to select the most appropriate manufacturing process in order to allow for the subsequent detail design of a mechanical component. Gonc-alves-Coelho and Mourao [24] have presented a case study of Axiomatic Design as a support for decision-making in a design for manufacturing context. The authors have shown how Axiomatic Design allows for perceiving the relationships between each product and the related manufacturing processes. Bae et al. [29] have presented a kinematic design methodology of a suspension system using Axiomatic Design. The authors also proposed a sequential design orders in suspension kinematic design to satisfy all of the suspension fundamental requirements. Lee et al. [30] have presented a framework based on Axiomatic Design for the systematic design and implementation of machine control systems. Based on the literature review, it has been found that many researchers have concentrated on the development of tools/techniques of sustainable developments; few have attempted on the sustainability assessment from education perspective. But no research has been attempted on the development of axiomatic model for sustainable manufacturing system which clarifies significantly the tools/techniques of such system.

## AXIOMATIC MODEL OF SUSTAINABLE MANUFACTURING SYSTEM

### *B Definition of PVs*

Both the independent and information axioms should not be violated while studying FR-DP-PV relationship. DPs of the physical domain act as the role of FRs and it act as design objectives in the process domain. In defining the PVs of a production system, complex parameters and their interaction should be considered. In order to comprehensively define PVs, they are the tools, methods and resources required to achieve the design objectives. From the fundamentals of AD theory, a hierarchical structure is presented which represents the modeling of sustainable manufacturing system. It is developed in a top-down direction but in the case of implementation it acts as bottom-up pattern. This is shown in Figure II. The top level represents customer needs which represent the objective of manufacturing system. The next level represents the conceptual features of the production paradigm called FRs. The third level contains the principles which are the parameters which affect the concepts are formulated as DPs in the model. The fourth level represents the methodologies consisting of tools, resources, practices and techniques formulated as PVs.

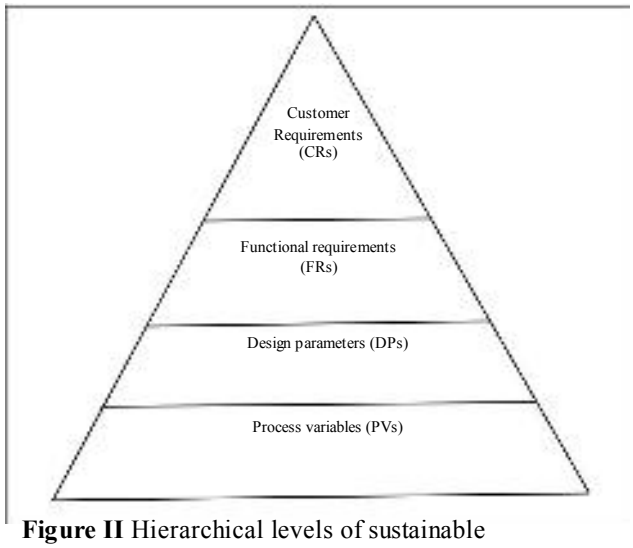


**Figure II** Hierarchical levels of sustainable manufacturingsystem design

### *B. Characteristics of AD model*

All organizations are focusing towards maximizing the value delivered to the customers. For this purpose, the systems need to be based on sustainable thinking which could be made possible by the implementation of sustainable principles. This aspect is shown in Figure III.

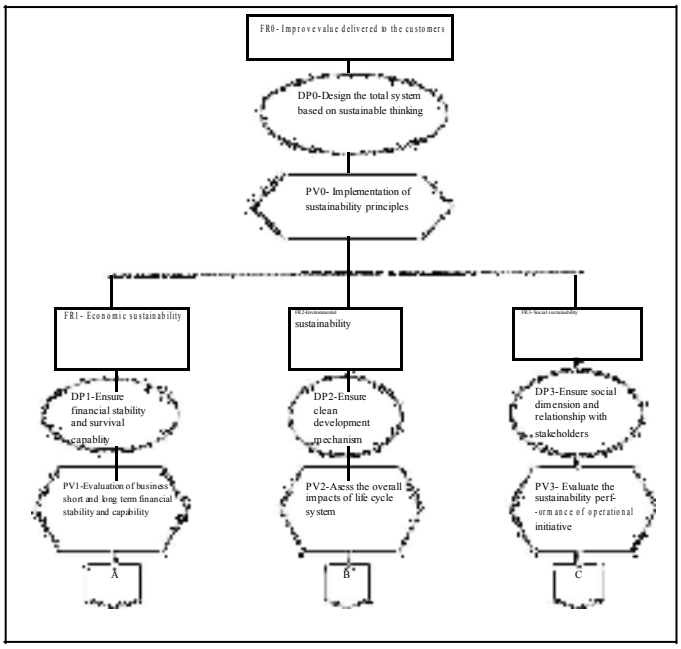


**Figure III** First level decomposition of sustainablemanufacturing system

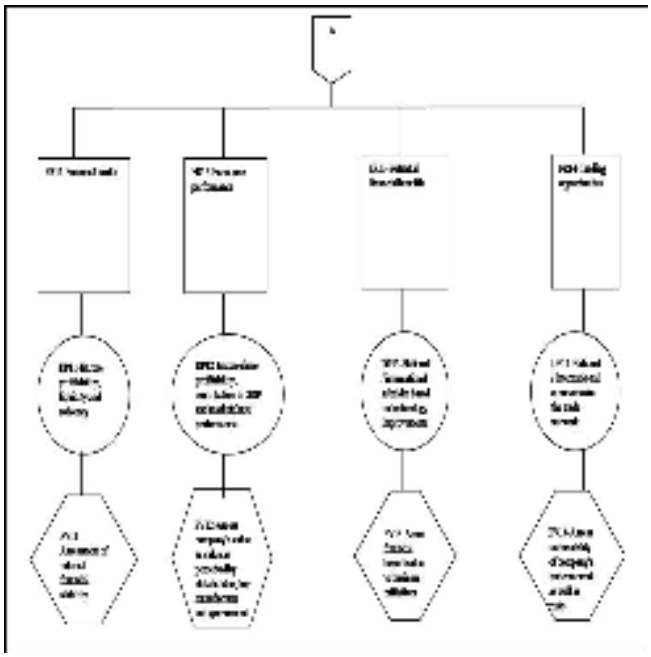

**Figure IV** Decomposition of FR1 'Economicsustainability'

From Figure III, FR1 'Economic sustainability' involves evaluation of business short and long term benefits, financial stability and capability thereby ensuring financial stability and survival capability. FR2 'Environmental sustainability' could be done by assessing the overall impacts of life cycle system thereby ensuring clean development mechanism. FR3 'Social sustainability' could be done by the evaluation of the sustainability performance of operational initiatives thereby ensuring social dimension and relationship with stakeholders. The decomposition of FR1 'Economic sustainability' is shown in Figure IV. FR11 'Financial health' can be assured by the assessment of internal financial stability which ensures profitability, liquidity and solvency. FR12 'Economic performance' can be assured by the assessment of company's value as value as perceived by stakeholders, top manufactures and government thereby ensuring share profitability, contribution to Gross Domestic Product (GDP) and market share performance. FR13 'Potential financial benefits' can be assured by the aassessment of financial benefits due to business initiatives which ensures National / international subsidies. FR14 'Trading opportunities' can be assured by the assessment of vulnerability of company's trade network as well as risks which enables the companies in the trade network. The decomposition of FR2 'Environmental sustainability' is shown in Figure V. FR21 'Air resources' which involves the assessment of company's contribution to regional air quality effects as well as global effects thereby toxicity, acidification, global warming, stratospheric ozone depletion could be avoided. FR22 'Water resources' which includes the assessment of availability of clean and safe water thereby the water usage and release of water effluents and pollutants could be minimised. FR23 'Land resources' involves the assessment of company's impacts on quantity & quality of land resources thereby the land usage & transformation, direct & indirect releases of soil pollutants could be minimised. FR24 'Mineral and energy resources' involves the assessment of company's contribution to depletion of non- renewable resources thereby the resources consumption could be minimised.

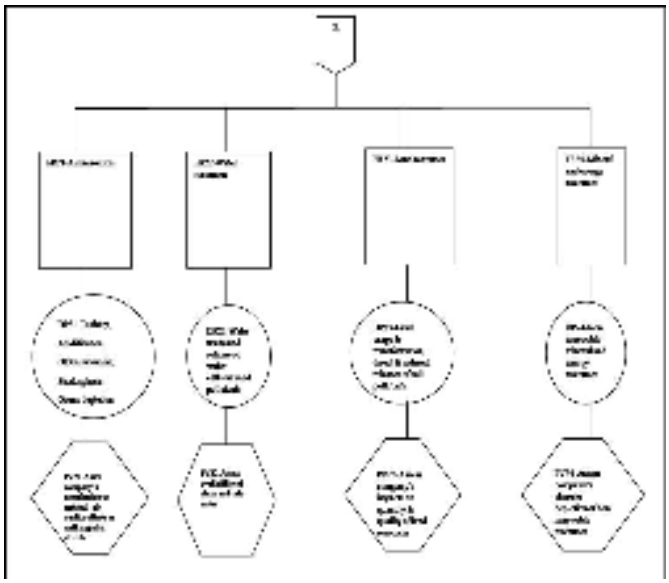

**Figure V** Decomposition of FR2 'Environmentalsustainability'

The decomposition of FR3 'Social sustainability' is shown in Figure VI.

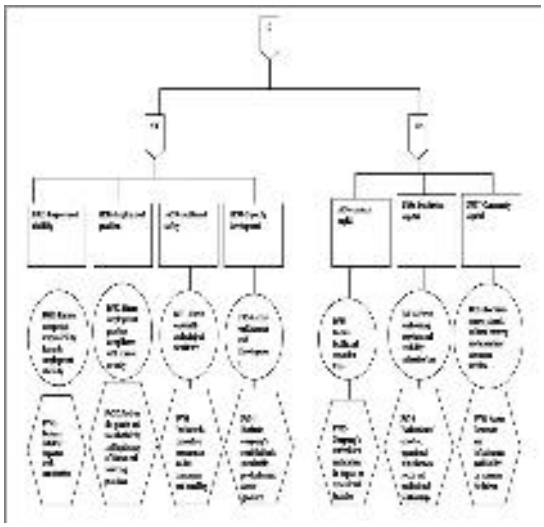

**Figure VI** Decomposition of FR3 'Social sustainability'

As shown, FR31 'Employment stability' is assessed by business initiatives impact on work opportunities thereby ensuring company's responsibility towards employment stability. FR32 'Employment practices' addresses the gender and racial ethnicity and legitimacy of labour and sourcing practices thereby ensuring employment practice compliance with laws of country and human rights. FR33 'Health and safety' evaluate the preventive measures as well as occurrence and handling thereby improving the focus on wealth and safety of workforce. FR34 'Capacity development' evaluate company's contribution to sustainable production and career guidance thereby improving the focus on Research and Development. FR35 'Human Capital' involves the company's activities on medical activities and its impact on educational facilities thereby ensuring health and education focus. FR36 'Productive Capital' involves the evaluation of effect of operational initiatives on social and institutional relationship thereby improving the focus on housing services and mobility infrastructures. FR37 'Community capital' assess the assets and infrastructure availability by business initiatives thereby improving the focus on sensor stimuli, cultural property and social and economic welfare.

## CONCLUSIONS

The manufacturing organizations have been witnessing a paradigm shift on designing services from manufacturing to sustainability. Environmental issues have become an imperative apprehension for most companies in relation to modern product development. The need for developing special methods during product development so as to ensure green initiatives is the vital focus of today's industries. The reduction of environmental impact has become an imperative for mostdeveloped countries and international enterprises. One of the identified failures of the sustainable implementation practice is the lack of scientific formulation for sustainable manufacturing and its associated transformation process, lack of precisely identified needs and reason for change. In this context, this article proposes an axiomatic model of sustainable manufacturing system design that provides a scientific model for concepts, principles and methodologies of sustainable manufacturing. The proposed hierarchical framework clarifies the interrelationships, concepts, principles and methodologies in an effective manner. The developed model has been test implemented in an Indian modular switches manufacturing organization to explore the practical feasibility. The results indicated that the developed AD model act as an effective guideline for the formulation of transformation process for sustainable manufacturing. The AD model has contributed to the improvements from environmental, economic and social perspectives. The practical and managerial implications are also being presented which enables the implementation of the AD approach in their organisation.

## REFERENCES


[1] Houshmand, M. and, Jamshidnezhad, B. An extended model of design process of lean production systems by means of process variables. Robotics and Computer-Integrated Manufacturing, 2006, 22: 1–16. Houshmand, M. and, Jamshidnezhad, B. An extended model of design process of lean production systems by means of process variables. Robotics and Computer-Integrated Manufacturing, 2006, 22: 1–16..

[2] Benedetto L D, Klemes J. The Environmental Performance Strategy Map: an integrated LCA approach to support the strategic decision-making process. Journal of Cleaner Production 2009; 17:900–906.

[3] Krozer J, Vis J. C. How to get LCA in the right direction?' Journal of Cleaner Production 6 1998; 53- 61.

[4] Gehin A, Zwolinski P, Brissaud, D. A tool to implement sustainable end-of-life strategies in the product development phase. Journal of Cleaner Production 2008; 16:566-576.

[5] Choi A C K, Kaebernick K, Lai W H. Manufacturing processes modelling for environmental impact assessment. Journal of Materiels Processing Technology 1997; 70:231-238.

[6] Dyllick T, Hockerts K. Beyond the business case for corporate sustainability. Business Strategy and the Environment 2002; 11:130–141.

[7] Hutchins.M.J,Sutherland.J.W.An exploration of measures of socialsustainability and their application to supply chain decisions. Journal of Cleaner Production 2008; 16(15): 1688-1698.

[8] Brown, A.C. Teaching Axiomatic Design to Engineers-Theory, Applications, and Software Journal of Manufacturing Systems, 2005, 24(3): 186-195.

[9] Goncalves-Coelho, A.M. and Mourao, J.F.A. Axiomatic design as support for decision-making in a design for manufacturing context: A case study. Int. J. Production Economics, 2007, 109: 81–89.

[10] Goncalves-Coelho, A.M. and Mourao, J.F.A. Axiomatic design as support for decision-making in a design for manufacturing context: A case study. Int. J. Production Economics, 2007, 109: 81–89.

[11] Bae S, Lee J M, Chu C N. Axiomatic Design of Automotive Suspension Systems.CIRP Annals – Manufacturing Technology2002; 51(1):115-118.

[12] Lee K D, Suh N P, Oh J H. Axiomatic Design of Machine Control SystemCIRP Annals - Manufacturing Technology 2001; 50(10:109-114.

**M149**

# Fuzzy Logic Based Leanness Assessment and its Decision Support System

Prof Gopinath H.Rathod
Dept of Mechanical Engineering
Basaveshwar Engineering College
Bagalkot, India
gopinath.rathod@gmail.com

***Abstract*—The manufacturing organizations have beenwitnessing a transition from mass manufacturing to lean manufacturing. Lean manufacturing is focused on the elimination of obvious wastes occurring in the manufacturing process, thereby enabling cost reduction. The quantification of leanness is one of the contemporary research agenda of lean manufacturing. This project work reports a research which is carried out to assess the leanness level of a manufacturing organization. During this research study, a leanness measurement model has been designed. Then the leanness index has been computed. Since the manual computation is time consuming and error-prone, a computerized decision support has been developed. This decision support system has been named as FLBLA-DSS (Decision support system for fuzzy logic based leanness assessment). FLBLA-DSS computes the fuzzy leanness index, computes the Euclidean distance, identifies the weaker areas which needs improvement. The developed DSS has been test implemented in an Indian Modular Switches Manufacturing Organization.**

***Keywords*—*Lean Manufacturing; Leanness assessment; Fuzzy Logic; Decision Support System***

## I. INTRODUCTION

Mass manufacturing is characterized with repetitive high volume production with limited variety. On the other hand, lean manufacturing is an integrated manufacturing system that is focused on waste elimination, thereby enabling cost reduction (B.J.Hicks 2007). Some of the techniques of lean manufacturing include total quality management (TQM), total productive maintenance (TPM), 5S , single minute exchange of dies (SMED), Kanban, Kaizen , and Poka Yoke (Frohner et al 1996). One of the contemporary research avenues in lean manufacturing is the assessment of leanness. Few researchers have contributed certain approaches for leanness assessment. Leanness assessment is described by linguistic terms which are characterized by ambiguity
and multi-possibility (Doolan, T.L. et al 2005). Fuzzy logic provides a useful tool to deal with problems in which the phenomenon is imprecise and vague (Lin et al 2006). A model based on fuzzy logic is used to provide a means of measuring how lean an enterprise is and to identify the principal obstacles for improvement. Approximate fuzzy numbers are used to represent linguistic values and a simple fuzzy arithmetic operation is employed to synthesize fuzzy numbers into fuzzy leanness index (FLI). FLI is to be
matched with appropriate linguistics, thereby enabling leanness to be expressed in linguistic terms. Fuzz performance importance index (FPII) is to be developed to help the managers to identify main drag factors and to provide scope for leanness improvement. Since, this kind of manual computation using fuzzy logic is a tedious, time consuming and error prone task, the need for computerized Decision Support System (DSS) is very much outlined in the previous research work. In this context, the DSS for fuzzy logic based leanness assessment is developed. This DSS is known as FLBLA-DSS.

## II. LITERATURE REVIEW

The literature has been reviewed from the perspective of leanness assessment, fuzzy logic and DSS applications. Detty and Yingling (2007) have attempted to quantify the benefits of implementing lean manufacturing at an assembly operation using simulation based approach. Rivera and Chen (2007) have measured the impact of lean tools on the cost time investment of a product using cost time profile. They have proposed cost time profile as a useful tool for the evaluation of improvements achieved by the implementation of lean tools and techniques. Narasimhan et al. (2007) have presented the empirical investigation of disentangling leanness and agility. Some of the performance dimensions of leanness include; conformance quality, delivery reliability, low buffering cost, efficiency, product mix flexibility etc. Fuzzy logic approach has its origin based on the human logic that takes advantage of conceptual knowledge without boundaries. Some of the concepts of fuzzy logic includes fuzzy set, linguistic variables, probability distribution and fuzzy if then rules. Most of the researches in qualitative environment suffer from vagueness in which case data may not be expressed as exact numbers (Yang and Li 2002). Linguistic assessment is recommended instead of numerical values (Beach et al. 2000). The proper selection of linguistic variables is more important. Arslan et al.(2004)

have developed a DSS to guide the machine tool selection process as well as to help the decision maker to solve the selection problem. Carneiro (2001) has developed a group DSS supporting group decisions and evaluation alternatives in the face to face meetings. Nagarur and Kaewplang (1999) have proposed a DSS for maintenance management known as Maintenances DSS. Mok (2009) have used evolutionaryoptimization methodology to synthesize DSS for production control, of a semi-conductor packaging assembly line. Based on the literature review, it has been found that few researchers have contributed certain approaches for leanness assessment. Many of the approaches have not been validated in the industrial scenario. The models used in those projects have not been fully supported with literature references. In this context, the objective of this project study is to report a project in which the conceptual model has been derived from literature and the model has been practically validated in the industrial scenario.

## III. CASE STUDY

The case study has been carried out in a modular switches manufacturing organization located in India. The organization will be designated as PQR throughout this project work. There existed a need for evaluating the leanness of the case organization.

### *A. Fuzzy logic based leanness assessment*

#### *a. Selection of criteria for evaluation*

The conceptual model for leanness evaluation has been developed from five perspectives namely – management responsibility, manufacturing management, manufacturing technology, workforce and manufacturing strategy. The model consists of five leanness enablers, twenty leanness criterion and fifty nine leanness attributes. An excerpt of the conceptual model for management responsibility enabler is shown in Table I.

TABLE I. EXCERPT OF LEANNESS ASSESSMENT MODEL

| SI NO | ENABLER | CRITERIA | ATTRIBUTES |
|---|---|---|---|
| 1 | Workforce leanness | Employee status | Flexible workforce to accept the adoption of new technologies.<br>Multi-skilled personnel.<br>Implementation of job rotation system. |
| | | Employee involvement | Strong employee spirit and cooperation.<br>Employee empowerment. |

#### *b. Determination of appropriate linguistic scale to assess performance ratings and importance weights of leanness attributes*

The linguistics variables Excellent (E) , Very Good (VG) , Good (G) , Fair (F) , Poor (P) , Very Poor (VP) , Worst (W) are selected to assist the performance ratings of lean capabilities. The linguistic variables Very High (VH) , High (H) , Fairly High (FH) , Medium (M) , Fairly Low (FL) , Low (L) , Very Low (VL) are used to assess the importance weights of lean capabilities.

#### *c. Measure performance rating and importance of lean capabilities using linguistic terms*

Five experts' ratings and weights have been considered in this study. Median operation is used to aggregate the experts' assessment. Integrated performance ratings and importance weights are shown in Table II

TABLE II. EXCERPT OF RATINGS AND WEIGHTS PERTAINING TO WORKFORCE LEANNESS ENABLER

| LCi | LCij | LCijk | Wi | Wij | Wijk | Rijk |
|---|---|---|---|---|---|---|
| LC3 | LC31 | LC311<br>LC312<br>LC313 | FH | FH | FH<br>M<br>H | G<br>F<br>G |
| | LC32 | LC321<br>LC322 | | FH | FH<br>M | G<br>F |

#### *d. Approximation of linguistic terms by fuzzy numbers*

The fuzzy numbers used for approximating linguistic values are presented in the Table III.

TABLE III. LINGUISTIC VARIABLES AND THE CORRESPONDING FUZZY NUMBERS USED IN THE ASSESSMENT

| Linguistic variable | Fuzzy number | Linguistic variable | Fuzzy number |
|---|---|---|---|
| Worst (W) | (0, 0.5,1.5) | Very Low (VL) | (0, 0.05, 0.15) |
| Very Poor (VP) | (1, 2,3) | Low (L) | (0.1, 0.2, 0.3) |
| Poor (P) | (2, 3.5, 5) | Fairly Low (FL) | (0.2, 0.35, 0.5) |
| Fair (F) | (3, 5,7) | Medium (M) | (0.3, 0.5, 0.7) |
| Good (G) | (5, 6.5, 8) | Fairly High (FH) | (0.5, 0.65, 0.8) |
| Very Good (VG) | (7, 8,9) | High (H) | (0.7, 0.8, 0.9) |
| Excellent (E) | (8.5, 9.5, 10) | Very High (VH) | (0.85, 0.95, 1.0) |

Applying the relation between the linguistic terms, fuzzy numbers are derived.

#### *e. Aggregate fuzzy ratings with fuzzy weights to obtain FLI.*

FLI consolidates the fuzzy ratings and weights to generate the overall enterprise leanness. The fuzzy index second grade lean capability is calculated as,

(LEANNESS index) $I = \Sigma_{j=1}^{N} LCij$ ( Lin et al 2006 )

(LEANNESS index) $I = \Sigma_{j=1}^{N} Ri \times Wi$

where $\Sigma_{i=1}^{N}$ i = 1

LCij = n W ijk ijk ) / n ijk

of grade 2 lean

Using the same ( W ⊗LC W

capabilities LCij and grade 1 lean capabilities LCi are obtained and presented in Table IV.

TABLE IV. EXCERPT OF RATINGS AND WEIGHTS PERTAINING TO WORKFORCE LEANNESS ENABLER

| LCi | LCij | LCijk | Wi | Wij | Wijk | Rijk |
|---|---|---|---|---|---|---|
| LC3 | LC31 | LC311<br>LC312<br>LC313 | (4.42,5.98,7.62) | (4.6,6.11, 7.71) | (0.5,0.65, 0.8)<br>(0.3,0.5,0.7)<br>(0.7,0.8,0.9) | (5,6.5,8)<br>(3,5,7)<br>(5,6.5,8) |
| | LC32 | LC321<br>LC322 | | (4.25,5.85,7.53) | (0.7,0.8,0.9)<br>(0.7,0.8,0.9) | (5,6.5,8)<br>(3, 5, 7) |

*f. Matching FLI with appropriate leanness level*

After obtaining FLI, it is matched with linguistic label. Euclidean distance method is used for matching the membership function with linguistic terms. The advantage of Euclidean distance method is the most intuitive form of human perception of proximity. The natural language set AL, Extremely Lean (EL), Very Lean (VL), Lean (L), Fairly Lean (FL), and Slowly Lean (SL) is selected for labeling. By matching the linguistic label with minimum D the leanness level of PQR is found to be 'Lean'.

g. *Identification of obstacles for improvement*

Though PQR is found to be lean, certain obstacles exist within the organization. FPII is the combination of performance rating and importance weights of a leanness capability. FPII of lean capabilities are listed in Table V.

TABLE V. LIST OF FPII FOR VARIOUS CRITERIA

| S.No | Parameter | FPII | S.No | Parameter | FPII |
|---|---|---|---|---|---|
| 1 | RAC111 | 2.34 | 31 | RAC414 | 1.55 |
| 2 | RAC112 | 1.55 | 32 | RAC421 | 3.76 |
| 3 | RAC113 | 2.65 | 33 | RAC422 | 2.34 |
| 4 | RAC121 | 1.55 | 34 | RAC431 | 3.3 |
| 5 | RAC122 | 1.55 | 35 | RAC432 | 2.65 |
| 6 | RAC123 | 2.34 | 36 | RAC433 | 3.3 |
| 7 | RAC211 | 1.55 | 37 | RAC434 | 3.3 |
| 8 | RAC212 | 2.65 | 38 | RAC441 | 4.675 |
| 9 | RAC221 | 1.37 | 39 | RAC442 | 3.3 |
| 10 | RAC222 | 2.65 | 40 | RAC443 | 2.34 |
| 11 | RAC231 | 3.3 | 41 | RAC451 | 2.34 |
| 12 | RAC232 | 2.34 | 42 | RAC452 | 2.65 |
| 13 | RAC233 | 2.34 | 43 | RAC453 | 3.76 |
| 14 | RAC234 | 2.34 | 44 | RAC461 | 3.76 |
| 15 | RAC241 | 2.34 | 45 | RAC462 | 2.34 |
| 16 | RAC242 | 2.65 | 46 | RAC463 | 3.76 |
| 17 | RAC243 | 2.34 | 47 | RAC464 | 2.34 |
| 18 | RAC251 | 4 | 48 | RAC465 | 3.3 |
| 19 | RAC252 | 4 | 49 | RAC511 | 2.65 |
| 20 | RAC261 | 3.3 | 50 | RAC512 | 2.34 |
| 21 | RAC262 | 2.65 | 51 | RAC513 | 2.34 |
| 22 | RAC263 | 2.34 | 52 | RAC521 | 2.34 |
| 23 | RAC311 | 2.65 | 53 | RAC522 | 2.65 |
| 24 | RAC312 | 3.3 | 54 | RAC523 | 3.76 |
| 25 | RAC313 | 1.55 | 55 | RAC524 | 2.34 |
| 26 | RAC321 | 2.65 | 56 | RAC531 | 3.3 |
| 27 | RAC322 | 3.3 | 57 | RAC532 | 4.675 |
| 28 | RAC411 | 2.34 | 58 | RAC541 | 3.43 |
| 29 | RAC412 | 2.34 | 59 | RAC542 | 3.3 |
| 30 | RAC413 | 2.65 | | | |

The management threshold has been fixed as 2.5 and the weaker areas have been identified.

## IV. CONCEPTUAL FEATURES OF FLBLA-DSS

FLBLA-DSS has been developed using Microsoft Visual Studio as frontend and Microsoft Access as backend. The architecture of FLBLA-DSS has been presented in figure I. This figure shows the proposed DSS architecture which consists of inputs such as Leanness enablers, Leanness criteria, Leanness attributes as well as performance weights and importance ratings. These inputs are processed in the data warehouse. Outputs are generated. Generated outputs are FLI, ED, FPII and proposals.

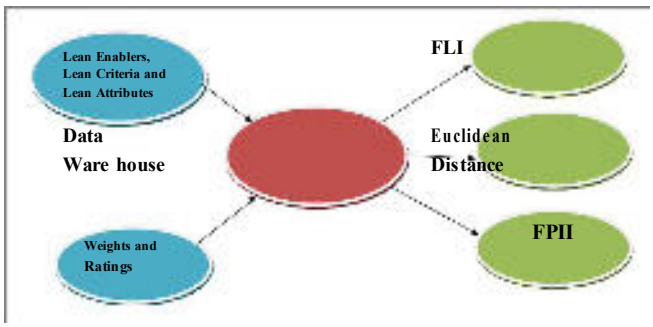


**Figure I** Architecture of FLBLA-DSS

The homepage screen of FLBLA-DSS is shown in figure II

**Figure II** Window showing login details of FLBLA- DSS

The screen showing the registration of an organization is shown in figure III

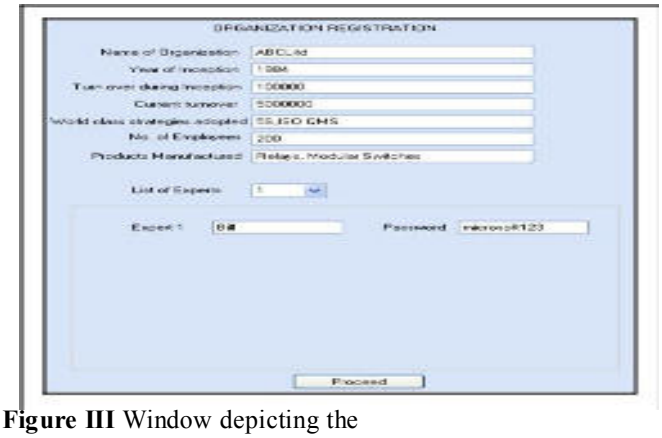


**Figure III** Window depicting the organizationalregistration process

FLBLA-DSS enables the user to define the criteria for leanness evaluation. The screenshot enabling this process is shown in figure IV

**Figure IV** Newly developed Knob designs

Next, the DSS enables the user to specify the ratings and weights. The screen enabling this process is shown in figure V.

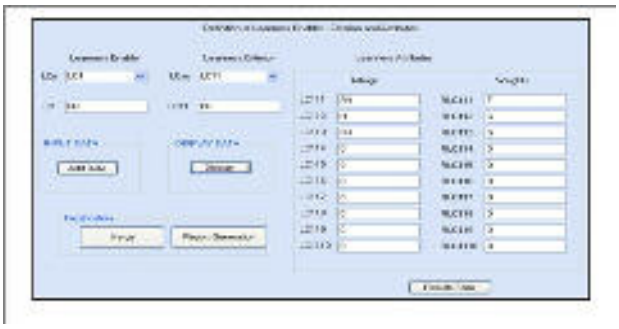

**Figure V** Window showing the input of ratings andweights

The aggregated ratings and weights generated by FLBLA-DSS is shown in figure VI

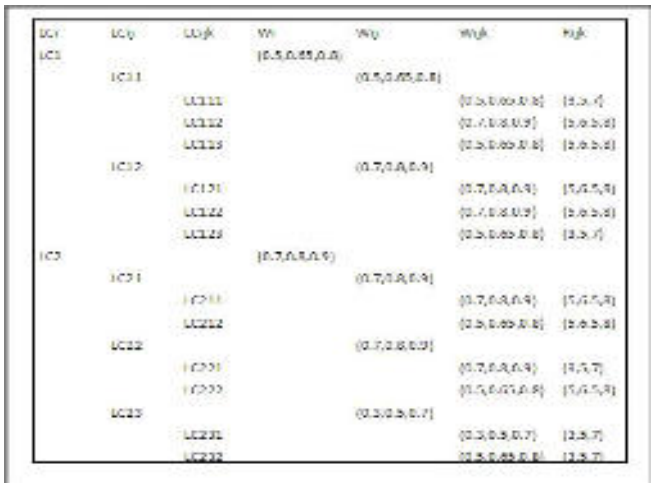

**Figure VI** Window showing the list of aggregated ratingsand weights

The screen enabling generation of FLI, as well as matching FLI with the natural language expression is shown in figure VII

**Figure VII** Window showing the calculation of FLI andEuclidean Distance

## CONCLUSION

The paradigm shift in manufacturing scenario has forced the emergence of lean manufacturing paradigm (Brown and Bessant 2003). Lean manufacturing is focused on streamlining
the processes thereby enabling cost reduction (Modarress et al 2005). The measurement of leanness gains importance. Due to the drawbacks associated with traditional leanness assessment models, fuzzy logic based leanness assessment has been used (Bayou et al 2008). Since the manual computation is time consuming and error prone, a computerized DSS has been developed. FLBLA-DSS, besides computing leanness index, generates proposals for improving the leanness of PQR. The DSS developed during this project has been test implemented in a single manufacturing organization. The membership functions of linguistic variables depend on the managerial perception of decision makers. In future, suitable modifications will be made to overcome these drawbacks.

## REFERENCES


[1] Abdulmalek, F.A. and Rajgopal J., Analyzing the benefits of lean manufacturing and value stream mapping via simulation: A process sector case study. International Journal of Production Economics, 2007, 223–236.

[2] Bayou, M.E. and De Korvin, A., Measuring the leanness of manufacturing systems — A case study of Ford Motor Company and General Motors. Journal of Engineering and Technology Management, 2008, 25, 287–304.

[3] Beach, R., Muhlemann, A.P., Price, D.H.R., Paterson, A., Sharp, J.A., A review of manufacturing flexibility. European Journal of Operational Research, 2000, 122, 41–57.

[4] Delgado, M., Verdegay, J.L., Vila, V, Linguistic decision making models. International Journal of Intelligent Systems, 1993, 7, 479–492.

[5] Detty, R.B., and Yingling, J.C. Quantifying benefits of conversion to lean manufacturing with discrete event simulation: a case study. International Journal of Production Research, 2000, 38(2), 429-45.

[6] Doolan, T.L. and Hacker, M.E., A Review of Lean Assessment in Organizations: An Exploratory Study of Lean Practices by Electronics Manufacturers. Journal of Manufacturing Systems, 2005, 24, 55-67.

[6] Frohner and Iwata.K ,Evaluating Design rinciples of Japanese production systems. International Journal of production Economics, 1996, 46(3), 211-217.

[7] Hicks.B.J. , Lean Information management:Understanding and eliminating waste, International Journal of Information management, 2007, 27(4), 233-249.

[8] Hines, P. and Rich, N. The seven value stream mapping tools, International Journal of Operations & Production Management, 1997, 17
(1), 46-64.

[9] Modarress, B., Ansari, A., and Lockwood, D. L. Kaizen costing for lean manufacturing: a case study. International Journal of Production Research, 2005, 43(1), 1751-1760.

[10] Narasimhan, R., Swink, M., and Kim, S.W., Disentangling leanness and agility: An empirical investigation. Journal of Operations Management. 2006, 24, 440–457.

[11] Rivera, L. and Chen, F.F., Measuring the impact of Lean tools on the cost–time investment of a product using cost–time profiles. Robotics and Computer-Integrated Manufacturing, 2007, 23, 684–689.

[12] Shah, R. and Ward, T., Lean manufacturing: context, practice bundles, and performance. Journal of Operations Management, 2003, 21, 129– 149.

[13] Shah, R., and Ward, T., Defining and developing measures of lean production. Journal of Operations Management, 2007, 25, 785–805.

[14] Singh, R.K., Kumar, S., Choudhury, A.K. and Tiwari, M.K., Lean tool selection in a die casting unit: a fuzzy-based decision support heuristic. International Journal of Production Research, 2006, 44(7), 1399-1429.

[15] Yang, S. L. and Li, T. F., Agility evaluation of mass customisation product manufacturing. Journal of Materials Processing Technology, 2002, 129, 640-644.

**M 154**

# A review- Wear Analysis Methodology of cam thrust Plate

Mayuri Sanjay Akiwate
Mechanical Department (Product Design and Development) D.K.T.E Society's Textile and Engineering Institute, Ichalkaranji.
Sangli, Maharashtra, India
Email Id- mayuriakiwate@gmail.com

Prof. (Dr.)V.R.Naik
HOD, Dept. of Mechanical Engineering
D.K.T.E Society's Textile and Engineering Institute, Ichalkaranji.
Sangli, Maharashtra, India

***Abstract*—Wear is a system characteristic or phenomenon; it is not a materials property. Materials wear differently in different wear situations, and different materials wear differently in the same situation. In most failures, some or even most of this information is simply not available. The more information that can be accurately determined, however, the better the chances of making a successful determination of cause and therefore, chance of remediation. Therefore, it is necessary to examine and characterize a number of different parameters, not simply the worn part. This paper presents the procedural sequence used in failure analysis cam thrust plate. The process of accurately detailing wear failure consists of a series of defined tasks undertaken by the failure analysis specialist. Each task is designed to obtain specific information from the failed components and systems.**

## I. INTRODUCTION

Wear is a system characteristic or phenomenon; it is not a materials property. Materials wear differently in different wear situations, and different materials wear differently in the same situation. Therefore, it is necessary to examine and characterize a number of different parameters, not simply the worn part. A tribosystem consists of all those elements that influence the wear process. The basic elements of a tribosystem are:
Contacting materials
Geometrical parameters (shape, size, roughness)
Relative motion
Loading
Type of lubrication
Environment
The wear situation is described in terms of the contact velocity, contact area, contact pressure, and entry angle. The purpose of the examination and characterization is to be able to define the tribosystem at the point of contact or wear site. In general, the amount of wear or root cause that results in the failure should be identified and defined.
Cam thrust plates are designed to control camshaft movement within the engine block. Excess camshaft movement can cause damage to the engine and retard or advance the ignition timing.
So, the wear analysis need to be done properly.

## II. METHODOLOGY OF WEAR ANALYSIS

The purpose of failure analysis is to prevent further failures. Failures occur when some system or part of a system fails to perform up to the expectations for which it was created. Materials do not fail in and of themselves. If a part is loaded beyond its tensile strength, it breaks. Until that stress level is reached, it does not break. When a part fails in service, it was under-designed or poorly manufactured for the circumstances in which it was used.

Below flowchart presents the procedural sequence used in general failure analysis studies. Failure analysis studies can be broken down into the following major categories. The same general procedure is used in analyzing wear failures.

TABLE I
Steps in Wear analysis

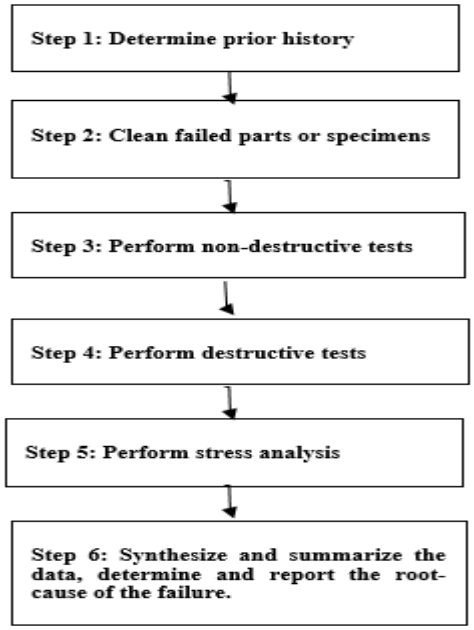


### A. *Step 1: Determine Prior History*

*1)Load & Motion-* It is representative of that which occurs .At starting we need to find out the load acting on component and relative motion of the part w.r.t other parts. It is recommended that the orientations of the parts relative to each other and the load-axis be maintained.

*2) Lubricant:* It is recommended that the specimen be lubricated. Check for the lubrication conditions. Also check for any hard, abrasive, particulate contaminants that might otherwise affect the wear properties of the specimens being tested.

*3) Mechanical/wear test data* - Check for any prior work done related to this wear and any testing done for this wear. Collect all the data.

*4) Design or intended operating parameters-* Take all the data related to material geometry and quality control plan for that component, chemical composition for that product and the process used for making that component.

*5) Environmental conditions-* check for in which type of environment product is operating.

### B. *Step 2: Clean Failed Parts or Specimens*

Clean, degrease. Ensure that cleaning of components produces a surface free of any particles, oils, greases, or other contaminants that might influence the wear process. Before any mechanical or optical aids are used, the specimen should be well illuminated and have a clean surface

### C. *Step 3: Perform Non-Destructive Tests*

Non-destructive testing or non-destructive testing (NDT) is a wide group of analysis techniques used in science and technology industry to evaluate the properties of a material, component or system without causing damage. The terms non-destructive examination (NDE), non-destructive inspection (NDI), and non-destructive evaluation (NDE) are also commonly used to describe this technology.Because NDT does not permanently alter the article being inspected, it is a highly valuable technique that can save both money and time in product evaluation, troubleshooting, and research. For wear analysis following NDT methods are used.

*1) Visual Inspection-* Visual inspection is the most common non-destructive examination (NDE) technique. Visual inspection is normally the first step in the examination process. Generally, almost any specimen can be visually examined to determine the accuracy of its fabrication. Visual inspection can be used to determine whether the part was fabricated to the correct size, Presence of colour or texture Contaminants Secondary cracks

*2) Dimensional Measurements-* Mechanical and/or optical aids may be necessary to perform v testing. Mechanical aids include measuring rules and tapes; calipers and micrometer's; squares and angle measuring devices; thread, pitch and thickness gauges; level gauges. Welding fabrication uses fillet gauges to determine the width of the weld fillet, undercut gauges, angle gauges, skew fillet weld gauges, pit gauges, contour gauges, and a host of other specialty items to ensure product quality.

As specifications and tolerances become closer, calipers and micrometer's become necessary. The variety of gauges available help to determine thread sizes, gap thicknesses, angles between parts, hole depths, and weld features

*3) Macroscopic Examination-*

At times, direct observation is impossible and remote viewing is necessary, which requires the use of optical aids. Optical aids for visual testing range from simple mirrors or magnifying glasses to sophisticated devices, such as closed-circuit television and coupled fiber-optic scopes. The following list includes most optical aids currently in use • Mirrors (especially small, angled mirrors) • Magnifying glasses, eye loupes, multilens magnifiers, measuring magnifiers • Microscopes (optical and electron) • Optical flats (for surface flatness measurement) • Borescopes and fiber-optic borescopes • Optical comparators • Photographic records

• Closed-circuit television (CCTV) systems (alone and coupled to borescopes/microscopes) • Machine vision systems • Positioning and transport systems (often used with CCTV systems) • Image enhancement (computer analysis and enhancement)

As it becomes necessary to see smaller and smaller discontinuities, the human eyes require optical aids that enable inspectors to see these tiny discontinuities. However, the increased magnification limits the area that can be seen at one time, and also increases the amount of time it will take to look at the entire specimen. Mirrors let the inspector see around corners or past obstructions. Combined with lenses and placed in rigid tubes, borescopes enable the inspector to see inside specimens such as jet engines, nuclear piping and fuel bundles, and complex machinery. When the rigid borescope cannot reach the desired area, flexible bundles of optical fibers often are able to access the area. Figure 2 shows visual inspection using a fiber-optic borescope. Some of the flexible borescopes have devices that permit the observation end of the scope to be moved around by a control at the eyepiece end. Some are also connected to CCTV systems so that a large picture may be examined and the inspection recorded on videotape or digitally. When the video systems are combined with computers, the images can be improved that may allow details not observable in the original to be seen. [7]

### D. *Step 4: Perform destructive tests*

Destructive testing (DT) includes methods where your material is broken down in order to determine mechanical properties, such as strength, toughness and hardness. In practice it means, for example, finding out if the quality of a weld is good enough to withstand extreme pressure or to verify the properties of a material.

*1) Hardness test*- Hardness, as applied to most materials, and in particular metals, is a valuable. The information from a hardness test can complement and often be used in conjunction with other material verification techniques such as tensile or compression to provide critical performance information.

Hardness testing plays an important role in materials testing, quality control and acceptance of components. We depend on the data to verify the heat treatment, structural integrity, and quality of components to determine if a material has the properties necessary for its intended use. Establishing a correlation between the hardness result and the desired material property allows this, making hardness tests very useful in industrial and R&D applications and in insuring that the materials utilized in the things we use every day contribute to a well-engineered, efficient, and safe world.

*2) The Microscopic Examination Process*

During Microscopic Examination, also called Microscopic Analysis or Microstructure Analysis, the structure of material is studied under magnification. The properties of materials determine how they'll perform under a given application, and these properties are dependent on the material's structure.

A carefully prepared specimen and magnification are needed for microscopic examination. Proper preparation of the specimen and the material's surface requires that a rigid step-by-step process be followed. The first step is carefully selecting a small sample of the material to undergo microstructure analysis with consideration given to location and orientation. This step is followed by sectioning, mounting, grinding, polishing and etching to reveal accurate microstructure and content.

Detailed viewing of samples is done with a metallurgical microscope that has a system of lenses (objectives and eyepiece) so that different magnifications can be achieved, for example 50X up to 1000X. Scanning Electron Microscopes (SEMs) are capable of much higher magnifications and are utilized for highly detailed microstructural study.

*3) Metallography*

It is the study of metals by optical and electron microscopes. Structures which are coarse enough to be discernible by the naked eye or under low magnifications are termed macrostructures. Useful information can often be gained by examination with the naked eye of the surface of metal objects or polished and etched sections. Those which require high magnification to be visible are termed microstructures. Microscopes are required for the examination of the microstructure of the metals. Optical microscopes are used for resolutions down to roughly the wavelength of light (about half a micron) and electron microscope are used for detail below this level, down to atomic resolution. The most commonly used microscope is the conventional light microscope. In principle, optical microscopes may be used to look through specimens ('in transmission') as well as at them ('in reflection'). Many materials, however, do not transmit light and so we are restricted to looking at the surface of the specimens with an optical microscope. Electron microscope can be used in the transmission e.g. Transmission Electron Microscope (TEM) and to look at the surfaces e.g. Scanning Electron Microscope (SEM) Microscopy can give information concerning a material's composition, previous treatment and properties. Particular features of interest are (I) grain size (II) phases present (III) Chemical homogeneity (IV) distribution of phases (V) elongated structures formed by plastic deformation.[6]

4) *Conduct appropriate chemical analyses.*

Chemical analysis should be conducted on the original material to determine if the material was of proper type and

grade, whether it met appropriate standards, and whether deviation from the specifications contributed to the fracture, wear, breaks corrosion and failure. Wet chemical analysis, Atomic Absorption, X-ray Photoelectron, Auger Electron and Secondary Ion Mass Spectroscopies are all potentially suitable methods of chemical analysis, depending on the particular need of the situation. The techniques differ in important ways. Other parts of the failure "system" may also require analysis, including corrosion products, coatings and liquids.[5]

*E) Step 5: Perform stress analysis*

Finite Element Analysis- The finite element method is a powerful numerical tool for analysing mechanical components and systems. The representation of a component or system mathematically with finite elements generally involves a discretization of the structure into many small pieces, e.g. small brick-like elements (hence the name of the method). The solution to the equations that govern the behaviour of the structure is approximated on each and every brick

The finite element method provides a tool to predict and evaluate component response, elastic or non-linear plastic, subjected to thermal and structural loads. Thermal analyses may include convection, conduction, and radiation heat transfer, as well as various thermal transients and thermal shocks. Structural analyses may include all types of constant or cyclic loads, mechanical or thermal, along with non-linearity, such as opening/closing of contact surfaces, friction, and non-linear material behaviour. Finite element analysis can be used during a failure study in such ways as:

• Predicting the response of an existing component or assembly to stress

• Assessment of remaining life of a component or assembly

• Determining the failure mode of a failed component or assembly, e.g. fatigue, creep, and buckling.

• Designing of a new component or assembly as a part of recommendations for remediation of the problem [5]

*F) Step 6: Synthesize and summarize the data, determine and report the root-cause of the failure.*

Proposed root causes of a failure must be based primarily on observedfacts. These facts, combined with the experience, skill and knowledge of the analyst willlead to sound conclusions.All the observed data should be reported, even if some of it seems peripheral. In thefuture, with additional data, it may turn out to be possible to use what seemed peripheralat first to make an even more sound interpretation. [5]

## IV. CONCLUSION

Materials wear differently in different wear situations, and different materials wear differently in the same situation. Therefore, it is necessary to examine and characterize a number of different parameters, not simply the worn part. So, we need to follow the procedural sequence used in general failure analysis studies. Failure analysis studies can be broken down into the major categories. The same general procedure is used in analyzing wear failures.

## V. ACKNOWLEDGMENT

I wish to express my deep sense of gratitude and indebtedness to my project guide and H.O.D of Mechanical Department Prof. (Dr.) V.R.Naik for providing guidance and constant supervision throughout this research work. Their timely help and conscientious efforts made it possible to improve the quality of my research work.

## VI. REFERENCES

[1] Eason, B. Noble, and I.N. Sneddon, "On certain integrals of Lipschitz Hankel type involving products of Bessel functions," Phil. Trans. Roy. Soc. London, vol. A247, pp. 529-551, April 1955. (*references*)

[2] Raymond G. Bayer 'Mechanical Wear Fundamentals and Testing', Second Edition, Revised and Expanded, 2004.

[3] Raymond G. Bayer 'Fundamentals of Wear Failures' Second Edition, 2004.

[4] K.C Ludema 'Friction, Wear, Lubrication A Textbook In Tribology' Professor Of Mechanical Engineering the University Of Michigan Ann Arbor 1996

[5] M. Zamanzadeh, E. Larkin and D. Gibbon'A Re-Examination of Failure Analysis and Root Cause Determination', December 2004 Destructive testing –nptel Non –Destructive testing- np

**M158**

# A Review-Experimental and Analytical Study of Ridger Plough Operating Under Different Condition

*Pratik Bapusaheb Patil*
*Mechanical Department (Product Design and Development)* D.K.T.E Socity's Textile and Engineering Institute, Ichalkaranji.
Kolhapur, Maharashtra, India
Email Id- pratik10089@gmail.com

*Prof.V.A.Kamble*
*Professor, Dept. of Mechanical Engineering*
*D.K.T.E Socity's Textile and Engineering Institute, Ichalkaranji.*
Kolhapur, Maharashtra, India
Email Id- kavija123@yahoo.co.in

***Abstract*—The ridger is the main machine used to build the furrows as a result of Cheapness and ease of manufacture. The study converses to fulfill the objectives, 1. To develop a ridger to increase the efficiency of furrow surface irrigation system by the adding unit to compact the soil and change the shape of irrigation channel. 2. To investigate the effect of forces on the surface of moldboard plough at different angles, depths and moisture contents and the variable on soil bin. 3. To calculate the optimum geometry parameter of sub solier tine using FEA software.**

Keywords—*Earthing Up Operation, Soil Force Sensor, the Finite Element Method, Ridger Plough.*

## I. INTRODUCTION

The ridger plough is used for developing surface irrigation and planting different crops on furrow and ridges. Surface irrigation is the most widely used method of irrigation. Surface irrigation of land faces some difficult problems. Low surface irrigation efficiency is one of the major problems, resulting in a huge loss of irrigation water desalination resources. In traditional surface irrigation systems, the entire surface of the soil is submerged, and the flow of water through the soil is primarily one-dimensional. In these systems, the application of water that exceeds the soil's water holding capacity is discharged from the bottom of the root zone and helps to leach salt from the root zone [11].Based on the soil and working conditions of current tillage tools, the force on the tillage tools is an important parameter for designing and manufacturing tillage tools, including soil type and conditions, water content and tillage depth. In clay soil, tools have higher traction to loam and sandy soil also Depth of work; working width, tool geometry and stability arrangements, and speed of advance are parameters that may affect the draft [1]. The finite element method (FEM) runs in the ANSYS Workbench DesignXplorer optimization module tool. This module helps create 45 different designs and then the module automatically performs finite element analysis on all design sets. The results show that the design set 34 is the optimal design; the total mass is also reduced by 2% [6].

## II. MATERIALS AND METHODS

The study was conducted in the Soil Mechanics Laboratory, Department of Agricultural MechanizationEngineering, Nanjing Agricultural University. Soil bin Laboratory experiment was tested (65 °, 75 °, 90 °) with moldboard ploughs (1LE-435) with different water contents (21%, 24% and 27%) and depth (15cm, 20cm and 25cm) Shown in "Fig.I" for the actual experimental soil position. Plough speed remains constant at 0.55 m / s. The plough depth and angle are controlled by adjusting the position of the rectangular tool bar (75 cm long) on the frame and fixed to the frame by this bar. The angle of the mouldboard plough panel can also be changed.

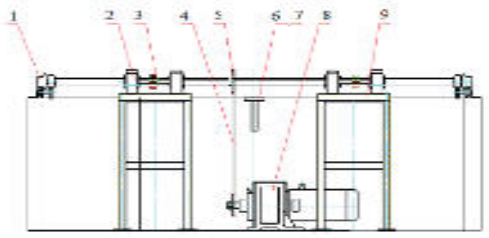


(1 Bearing shaft Stand, 2 Block, 3 Sprocket-driven Chain, 4 Main driven chain sprocket, 5 Driven plough, 6, 7 - Frame connections, plough, 8 motor, 9 Frequency stent.)

Fig. I Diagram of soil bin

### A. Soil Physical and Mechanical Properties

"Tab-I", soil physical and chemical properties, soil texture, bulk density, soil cohesion and soil internal friction angle were measured before and after each test. Soil cohesion and internal friction angle were measured by a direct shear tester. Soil texture is clay (47% clay, 42% sludge and 11% sand).

TABLE I
Measurement of soil cohesion and soil friction angle before and after tillage at different soil moisture content

| Soil moisture Content % | Soil cohesion (c)before tillage | Friction angle before tillage |
|---|---|---|
| 21 | 6.96 | 40 |
| 24 | 5.49 | 39 |
| 27 | 4.29 | 28 |

### B. Soil forces on the surface of Moldboard Plough

*"Fig.II"*When studying working in different settings, the soil forces acting on the plough should help to select the correct

configuration of width, depth, speed and fieldconditions to optimize productivity. Eleven holes (2.52 cm each) were made in different parts of the ploughshare and the threaded cylinder was fixed to the back of the plough to mount the sensor (5 cm highand 5 cm wide). In the plough surface mounted 11th sensor to measure soil force, the first three sensors installed in the shear part, the sensor 4 to 6 installed in the shear coulter joint part which we call the curvature sensor is installed in 7 to 11 Plough of mouldboard. The data (voltage) of these sensors is collected into an excel spreadsheet as an output file on a computer loaded with Lab View software [1].

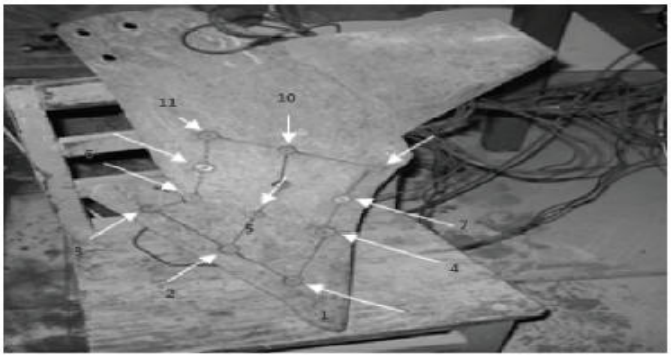


Fig II. Front view of moldboard plough with eleven sensors

## III. EXPERIMENTAL TESTING EARTHING UP OPERATION

The experimental treatment consisted of two sowing techniques, namely shallow furrows, deep furrows and three earthing treatments, i.e. ungrounded, grounded with a shovel and grounded with a ridging machine. According to the design of the divisions, 22 commercial sugarcane varieties SPF-234 were sown in September with a yield of 75,000 double-berries per hectare seeds. The plot measured 4.8 meters by 8 meters and was repeated 4 times. Seeding techniques are placed on the main plot and the soil is treated on a sub-plot. Crops are fertilized at a rate of 168-112-112 kg NPK / ha. The entire P and K are applied at the time of planting. N divided into three construction, one-third completed when germinated, tillers 1/3, grounding 1/3. All other cultural conventions are maintained at the level suggested. During the study, standard procedures were used to record data for different parameters [15].

## IV. FINITE ELEMENT ANALYSIS OF THE SUBSOILER TINE

All the dimensions were measured and then Solidworks three-dimensional parametric design software was used to build the 3D solid model and its assembly process. This study focuses on the deformation of a single tine of subsoil tooth. Therefore, none of the components of the subassembly solid model is used for finite element analysis. The commercial FEM package Ansys Workbench is used in the finite element stress analysis process. This Finite element analysis is based on 3D, linear, static and isotropic material model assumptions. When assessing the actual working conditions, the boundary conditions are properly applied to the model. According to the experimental data consider the maximum traction of each tooth size. Assuming 12,773 N. drafts for each tooth. This is the narrow share of the surface. “Tab.II” the opposite direction of the movement of the teeth. St-52's standard steel properties are specified as tin material .Ansys Workbench meshing capabilities is used to create a mesh structure of tine and a 10-node quadratictetrahedron (10-node tetrahedron solid/solid 186) element type is used in the meshing operation. In the tooth grid structure, 9219 total nodes and 4562 total elements were obtained. For a single tooth, the solid model of the tooth, the boundary conditions and the mesh structure are shown separately in “Fig III”

Table II
Material properties of the tine (St-52)

| Properties | Unit | Value |
|---|---|---|
| Young’s modulus | [Gpa] | 205 |
| Tensile ultimate strength | [Mpa] | 520 |
| Yield strength | [Mpa] | 355 |
| Poisons ratio | - | 0.29 |
| Density | [kgm^3] | 7870 |

After the preprocessor operation, a post-processing solver for finite element analysis is generated The simulation results show that the maximum equivalent stress is 432.49 MPa and the maximum deflection is 18116 mm. Comparing the stress results with the yield point of the tooth (355MPa), it is found that the maximum stress exceeds the yield point, indicating the plastic deformation of the

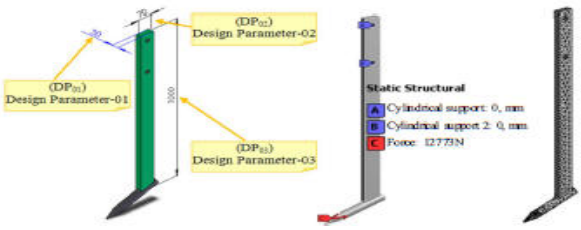


Fig III. 3D solid model, boundary conditions and mesh structure of the subsoiler tine

tooth. Not only theoretical comparison but also a visual survey to confirm the tooth deformation. “Fig.IV” shows the finite element simulation print and deformation.

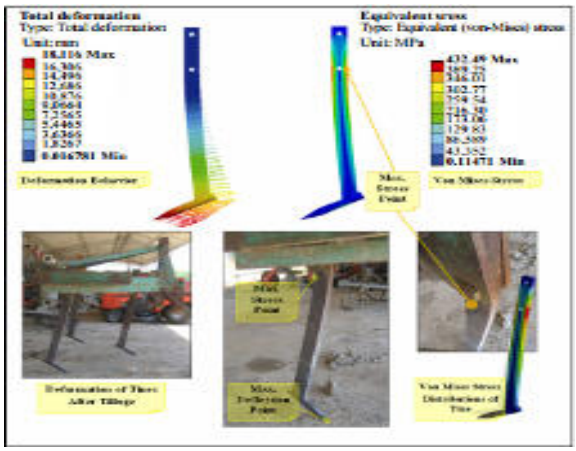


Fig IV FEM simulation results and deformation of the tine

## V. CONCLUSIONS

1. Trench sowing enhanced germination and final cane yield non-significantly. Earthing up either with spade or ridger reduced cane lodging significantly. Earthing up increased cane yield up to 19.20%. Earthing up improved cane juice quality.
2. It is observed that the maximum force is applied at angles of $65^0$ and $75^0$ and the common and moldboard while the curvature at $90^0$ and the force on the mold is almost the same but the maximum force is exerted on the blade plow on the shared part. The minimum force exerted on the squeegee and the maximum force exerted on the common portion of the squeegee member was also observed. From the study, it is clear that the maximum force measured in 21% of the moisture content at 900 angles of the ploughshare part. It shows that farming should be done with low angle 650 and depth (15 cm).
3. In the FEM stress analysis, the maximum equivalent stress was 432.490 MPa, and a total deflection of 18.116 mm was obtained on the initial design of the tine. When compared with the yield point of the tine material, the results signified that there was plastic deformation occurring on the tine.
4. A "what-if" parameter strategy was used in the optimization study and in total, 45 design sets were created and solved. After consideration of all of the results, design set number 34 was agreed as the optimum design of the tine under the defined conditions.
5. The final design of the tine has the maximum global stress of 346.61 MPa and maximum total deflection of 12.116 mm. The total mass of the tine was reduced by 0.367 kg, the equivalent of 2.01%.

## VI. ACKNOWLEDGMENT

I wish to express my deep sense of gratitude and indebtedness to my project guide **Prof. V.A.KAMBLE, Department of Mechanical Engineering**, for providing unreserved guidance, inspiring discussions and constant supervision throughout this research work. Their timely help, constructive criticism and conscientious efforts made it possible to improve the quality of my research work.

## REFERENCES

[1] A. Mari, C Ji, A.A Tagar., F.A Chandio., M Hanif., (2014) "Effect Of Soil Forces on the Surface of Mouldboard Plough under Different Working Conditions," Bulgarian Journal of Agriculture Science, 20:497-501.

[2] T. Marakoglu, K. Carman, (2009) "Effect of Design Parameter of A Cultivator Share on Draft Force and Soil Loosing In Soil Bin," Journal of Agronomy ISSN 1812-5379.

[3] M.Topakci , H. Kursat Celik, Canakci Murad , E. W. Rennie Allan , Akinci Ibrahim , Karayel Davut.,(2010) **"**Deep Tillage Tool Optimization By Means of Finite Element Method: Case Study For A Subsoiler Tine," Journal of Food, Agriculture & Environment 8 (2): 531- 536.

[4] Hugo Malon, A. A. Javier, A. Bone, M. Vidal, Javier Garcia-Ramos F., (2015) "Design and Testing of an Agricultural Implement for Underground Application of Rodenticide Bait," ISSN 1424-8220.

[5] P. Novak, J. Chyba, F. Kumhala, P. Prochazka, (2014) "Measurement of Stubble Cultivator Draft Force under Different soil Conditions," Agronomy Research 12(1), 135–142.

[6] G. Ghahramanian, E. Cakir , J. Klonowski , A. Lisowski ,(2014) " Performance of New Design Mouldboard Plough Model (Double Sided Plough) In A Soil Bin," Journal of Agriculture Machinery Science, 10(3), 195-198.

[7] M.Amara, I. Guedioura , A. M. Feddal , (2013) " Experimental Model To Estimation Draft Force for Mouldboard Plough; Incorporating Effects of Plough Geometric Parameters," International Journal of Advance Agricultural Research 27-36.

[8] W. Wang , J. Zhange , M. Dai , M. Ni , " Plough Bottam Surface Stress Test And Research Based on Farmland Soil Conditions In Southern Xinjiang Region of China".

[9] A. Ibrahmi, H. Bentaher, M. Hbaieb, A. Maalej, A.M. Mouazen, (2015) "Study the Effect of Tool Geometry and Operational Conditions on Mouldboard Plough Forces and Energy Requirement: Part 1 Finite element simulation," Computers and Electronics in Agriculture.

[10] I. A. Loukanov, J. Uziak, J. Michalek**,** (2005)"Draft Requirements of Enamel Coated Animal Drawn Mouldboard Plough".

[11] A. A. Meselhy, M. E. Elhagarey (2014) "Study the Relationship Between Using of the Modified Ridger and Efficiency of Surface Irrigation System In Ras-Sudr Area," International Journal of Advanced Research.

[12] A. Ibrahmi, H. Bentaher, M. Hbaieb, A. Maalej, A.M. Mouazen, (2015) "Study the Effect of Tool Geometry and Operational Conditions on Mouldboard Plough Forces and Energy Requirement: Part 1 Experimental Validation with Soil Bin Test," Computers and Electronics in Agriculture.

[13] A. Kumar, U. A. Hamza, "Design, Development and Performance Evaluation of Fertilizer Band Placement Cum Earthing Machine for Maize (*Zea mays*)".

[14] C. M. Dev, R. N. Meena, A. Kumar, G. Mahajan , (2011) "Earthing Up And Nitrogen Levels In Sugarcane Ratoon Under Subtropical Indian Condition," Indian Journal Of Sugarcane Technology 26(1).

[15] M. Aslam , A. Hameed , A. A. Chattha , (2008) "Effect of Sowing Depth and Earthing Up on Lodging In Presown Sugarcane, " ISSN 1028-1193

**M159**

# A process FMEA tool used in gear pumps manufacturing industry to improve quality and efficiency.

P. S. Mali, PG Student, DKTE's Textile and Engineering Institute, Ichalkaranji, India.

G. S. Joshi, Professor, DKTE's Textile and Engineering Institute, Ichalkaranji, India.

I. A Patil, Technical Director, Adroit Engineers, MIDC Area Shiroli Kolhapur, India.

*Abstract*—**Pump is a mechanical device to increase the pressure energy of liquid. Gear pump is a positive displacement pump. Gear pumps generally used in industries, agriculture, aerospace and automotive applications.**

**Failure mode effective analysis (FMEA) is a powerful tool in identifying failure problems of component or process and prioritizing them and planning for its elimination. The paper shows process FMEA to eliminate and identify failure causes of gear pumps manufacturing process. Risk priority number (RPN) used in FMEA to determine risk level. With the help of Severity (S), occurrence (O), and detection (D) parameters to calculate RPN value. After calculating RPN value, corrective actions are proposed to avoid potential risks which aid to improve efficiency and effectiveness of gear pump manufacturing processes and increase customer satisfaction.**

**The results are represented in the form of a case study. These results show the improvement in manufacturing process and considerable reduction in gear pump production risk level.**

***Keywords***—*Gear pump, PFMEA, Risk priority number, Corrective action*

## 1. INTRODUCTION

In today's highly competitive market, manufacturers need to produce the correct product, reduce their production costs, and make the most of their resources, in addition to being delivered to customers on time. One of the most important indicators of quality is to reduce or eliminate product defects, so it's crucial to focus on preventing problems and improving safety before something goes wrong. A failure mode is "the way or manner in which a product or process could fail to meet design intent or process requirements" [1]. If done well, FMEA can identify and mitigate or eliminate the problem before the problem occurs, so that steps can be taken to overcome the problem.

Failure modes and effects analysis is an analytical technique that combines people's skills and experience to identify possible failure modes of a product or process and to plan for the elimination of a scrap. FMEA is a "before-the-event" action requiring a team effort to easily and inexpensively alleviate changes in design and production. The FMEA method is now used in a wide variety of industries, including semiconductor processing, food service, plastics, software, aerospace, automotive and healthcare [2].

The main goal of FMEA is to improve the design of the system FMEA; the goal is to improve the design of the system. For the design of FMEA, the goal is to improve the design of subsystems or components. For Process FMEA, the goal is to improve the design of the manufacturing process [3].

## 2. TYPES OF FMEA

There are several types of FMEAs; some are used much more often than others. The types of FMEAs are shown in Fig.1

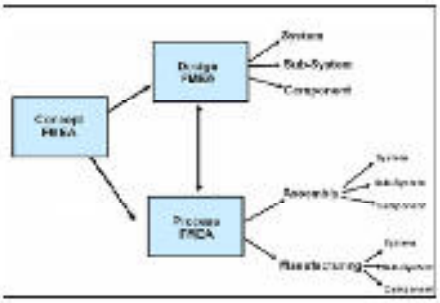

Fig.1 Types of FMEA [4]

There are two main types of FMEA: Design FMEA and Process FMEA. Designing FMEA is done during the design process by identifying potential failure modes caused by design flaws that can be of use in past production experience. Design FMEA 'is usually done on three levels - system, subsystem and component level [5], and focuses on sub-sections. Process FMEA is used to account for potential errors in manufacturing and assembly caused by manufacturing defects, including systems, subsystems, and components.

## 3. DOCUMENTATION PROCEDURE FOR FMEA

A. Item and its functions

Specify all the features of an item, including the environment it must run on.

B. potential failure mode

• Consider past failures, present reports, brainstorming.
• Describe in technical terms, not as customers will see it.
• Examples include cracking, deformation, loosening, short circuiting, rupture, leakage, adhesion, oxidation and the like

C. The potential effects of failure

• Customer thinks (internal / end user).
• For example, unstable operation, poor appearance, noise, impaired function, deterioration, etc.

D. Severity

Severity is the assessment of the severity of the potential failure mode. Here we have to determine all the failure modes according to the functional requirements and their effects. A sample table of the severity is given below.

Table 1: Table of Severity [11]

| Code | classification | Example |
|---|---|---|
| 10 | Hazardous without warning | Very high ranking- affecting safe operation |
| 9 | Hazardous with warning | Regulatory non compliance |
| 8 | Very high | Product becomes inoperable, with loss of function- customer – customer very much dissatisfied |
| 7 | High | Product remain operable but loss of comfort/ convenience- customer dissatisfied |
| 6 | Moderate | Product remain operable but loss of comfort/ convenience- customer discomfort |
| 5 | Low | Product remain operable but loss of comfort/ convenience- customer slightly dissatisfied |
| 4 | Very low | Nonconformance by certain items- noticed by most customers |
| 3 | Minor | Nonconformance by certain items- noticed by average customers |
| 2 | Very minor | Nonconformance by certain items- noticed by selective customers |
| 1 | None | No effect |

E. Class

Any classification of special product features that require additional process control

F. Potential causes / mechanisms of failure

Each reason / mechanism must be listed concisely

• For example, unreasonable causes are unreasonable design, incorrect materials, inaccurate life expectancy, poor environmental protection, excessive stress, insufficient lubrication, etc.
• For example, the failure mechanism is fatigue, wear, corrosion, yielding, creep and the like.

G. Occurrence

Occurrence is the likelihood that one of the specific causes / mechanisms will occur. In this step, it is necessary to see the reason for the failure and the number of occurrences. You can do this by looking at similar products or processes and the faults recorded for them. The reason for failure is considered a design weakness. The following table gives an example of what happened.

Table 2: Table of Occurrence [11]

| Code | Classification | Example |
|---|---|---|
| 10 and 9 | Very high | Inevitable failure |
| 8 and 7 | High | Repeated failures |

| | | |
|---|---|---|
| 6 and 5 | Moderate | Occasional failures |
| 4,3 and 2 | Low | Few failures |
| 1 | Remote | Failure unlikely |

H. Current Design Control

Control activities typically include the support of preventive measures, design verification, and design verification supported by physical testing, mathematical modeling, prototype testing and feasibility evaluation.

I. Detection

• Design a metric that controls the ability to detect potential causes / mechanisms or subsequent failure modes prior to production.

• Through physical testing, mathematical modeling, prototype testing, feasibility assessment and other support.

Table 3: Table of Detection [11]

| Detection | Criteria | Rank |
|---|---|---|
| Extremely likely | Can be corrected prior to prototype/ controls will almost certainly defect | 1 |
| Very high likelihood | Can be corrected prior to design release/ high probability of detection | 2 |
| High likelihood | Likely to be corrected/ high probability of detection | 3 |
| Moderately high likelihood | Design controls are moderately effective | 4 |
| Medium likelihood | Design controls have an even chance of working | 5 |
| Moderately low likelihood | Design controls may miss the problem | 6 |
| Low likelihood | Design controls are likely to miss the problems | 7 |
| Very low likelihood | Design controls have a poor chance of detection | 8 |
| Very low likelihood | Unproven, unreliable design/ poor chance for detection | 9 |
| Extremely unlikely | No design technique available/ controls will not detect | 10 |

J. Risk Priorities (RPN)

The RPN is an indicator of the correct corrective action to determine the fault mode. It is calculated by multiplying the severity, occurrence, and detection level by 1 to 1000. After determining the severity, the number of occurrences, and the number of detection, RPN can be easily calculated by multiplying by the following three numbers: RPN = Severity × Occurrence × Detection. Small RPNs are always better than high RPNs. The RPN can only be calculated for the entire process and / or design process. Once calculated, it is easy to identify the areas of most concern. Engineering teams generate RPNs and focus on failure mode solutions.

K. Recommended action

Start with a high RPN and work in descending order

• The goal is to reduce one or more criteria that make up an RPN.

• Typical actions are experimental design, revising test plans, revising material specifications, revising designs, and more.

• It is important to mark "None" if you do not recommend using FMEA files in the future.

L. Responsibility and date of completion

The person or group responsible for the proposed action and the target completion date.

M. Action taken

A brief description of the action taken after taking concrete action on the team.

N. Revised RPN

The revised RPN is calculated by recalculating the severity, taking place and detecting the rankings after implementing the recommended actions.

Revision RPN = Revision (Severity × Occurrence× Detection)

## 4. FMEA PROCEDURE [7]

The process of FMEA can be divided into the following steps. These steps are briefly explained below.

Step 1: collect system functions and build a hierarchical structure. Divide the system into several subsystems and have multiple components.

Step 2: Determine the failure modes and their effects for each component. Based on their respective impact on the system, specify the severity level (S) for each failure mode.

Step 3: Determine the cause of the failure mode and estimate the probability of each failure. The occurrence level (O) of each failure mode is assigned according to the probability of occurrence.

Step 4: List the method to detect the failure and evaluate the system's ability to detect the failure before it occurs. Assign detection level (D) for each failure mode.

Step 5: Calculate the risk priority (RPN) and determine the priority of interest.

Step 6: Take recommended steps to enrich system performance.

Step 7: FMEA report in tabular form.

Table 4. Generic FMEA Worksheet [2]

[illegible]

## 5. CASE STUDY AND FMEA ANALYSIS

Gear pumps are the industry's oldest and most commonly used pumps. Gear pump is a simple positive displacement pump. Due to long service life, low maintenance costs and high performance, gear pumps are the main choice for fuel system designers.

Gear pumps are made by enclosing two or more gears in a close-fitting housing. The driver rotates the shaft connected to one of the gears to rotate it. Just like the power transmission gear, this gear drives the other gear through the meshing of the teeth of the two gears. As the gear rotates, on the one hand, the teeth disengage from one another. When a tooth is pulled out of the space between the two teeth of the other gear, it creates a vacuum.

Once the space between gear teeth is filled with liquid, the liquid enters these chambers and is blocked by the housing until it reaches the discharge side of the pump. The liquid stays in the position between the teeth until it reaches the other side where the gear meshes, where the teeth converge. Then when the teeth on the other gear enter the space between the teeth, the liquid is squeezed out. Since the housing still forms a seal around the gear, the only place where the evacuated liquid will flow is the discharge port of the pump.

Conduct case studies and apply FMEA technology to the gear pump manufacturing process industry. The operation and process of various machines for manufacturing gear pumps vary. Blanking, grinding and drilling are the major manufacturing operations for gear pumps. Perform the following manufacturing operations on the gear pump:

- Inward inspection after blanking
- Surface blanking
- Common drilling (F.P & B.P)
- 2 hole drilling (F.P)
- Ø 6.5 drilling
- Ø 24 boring ( M.P)
- ID reaming gear
- OD grinding
- Inward inspection after teeth cutting
- Inward inspection after heat treatment
- Pump assembly
- Testing
- Packing

The sequencing criteria for severity occurrence and detection are selected appropriately by analyzing the machine's past failure history. First, the basic requirements of the manufacturing process are studied and the potential failure modes of the specific process are identified. After that, the potential effects of failure mode are recorded with their severity values. Also calculates the value of potential causes and their prevention. Assign the test value to the failure mode and finally calculate the R.P.N value. If S = 8, O = 1, & D = 5, the sample is calculated as

Then, R.P.N = S × O × D = 8 × 1 × 5 = 40

Process FMEA report represent in Table 5.

## 6. CONCLUSION

FMEA provides a record / analysis method for recording analysis results for future use and continuous process improvement. This is a systematic approach to risk analysis, definition, estimation and evaluation. Following standard setup procedures will shorten setup time and improve part accuracy, improving process quality and efficiency. FMEA analysis can easily help improve the efficiency and quality of manufacturing processes, reducing the number of defective products and saving rework costs and time. For each specific process, the precautionary measures suggested in the table can greatly reduce the monetary and time-related losses of the manufacturing industry.

Current work involves FMEA research and its implementation to identify and eliminate the potential pitfalls in gear pump manufacturing. FMEA eliminates problems and has the benefits of reduced costs, product development, more reliable products, and ultimately

customer satisfaction. The table lists the results of the FMEA and identifies failure modes with an RPN range of 40-120. After corrective action, its RPN decreases. Therefore, the method can be successfully used to improve the production process and product quality of the company's products.

## 7. REFERENCES

[1] AIAG, "Potential Failure Mode and Effects Analysis (FMEA), Automotive Industry Action Group ,4th ed., 2008.
[2] Fadlovich, Erik., "Performing Failure Mode and Effect Analysis", cited 2010; Available from:http://www.embeddedtechmag.com/Component/content/article/6134,Embedded TechnologyB.
[3] Carl S. Carlson, "Effective FMEAs: Achieving safe, reliable and Economical products and processes using Failure Mode and Effects Analysis", john Wiley & Sons, Wiley Series in Quality & Reliability Engineering 2012.
[4] Guidance on failure Modes & Effects Analysis (FMEAs) , " The international Marine Contractors Association .",IMCAM 166,April 2002.
[5] Dr. D. R. Prajapati, "Implementation of Failure Mode and Effect Analysis : A Literature Review" , International JournalOf Management, IT and Engineering, volume2, Issue 7, July 2012.
[6]Carl S. Carlson, "Understanding and applying the fundamental of FMEAs", IEEE, January 2014.
[7]Dr. D.R.Prajapati, "Application of FMEA in Casting Industries: A case study", UdyogPragati, vol.35, Issue 4, pp. 6-14,December 2011.
[8]E. Lisowski , J. Fabiś, (2010), "Prediction of potential failures in hydraulic gear pumps", archives of foundry engineering, volume10, pages 73-76.
[9]S. Arunkumar, Rajeev. V, (2014) "centrifugal pump-failure mode effective analysis", International journal of pure and applied research in engineering and technology, volume3(4), pages 269-276.
[10]Deeptesh Singh, Amit Suhane, (July 2015), "Study of Centrifugal Pump Using Failure Mode Effect and Critical Analysis Based on Fuzzy Cost Estimation: A Case Study", International Journal of Science and Research (IJSR), volume 4, pages 19-22.
[11]Tejaskumar S. Parsana and Mihir T. Patel, (August 2014), "A Case Study: A Process FMEA Tool to Enhance Quality and Efficiency of Manufacturing Industry", Bonfring International Journal of Industrial Engineering and Management Science, Vol. 4, pages 145-152.
[12]Faisal KP, Falah Ummer, Hareesh K C, (January 2015), "Application of FMEA Method in a Manufacturing Organization focused on Quality", International Journal of Engineering and Innovative Technology (IJEIT), Volume 4, pages 64-70.

## BIOGRAPHIES

1. P. S. Mali, PG Student, DKTE's Textile and Engineering Institute, Ichalkaranji, India.
2. G. S. Joshi, Professor, DKTE's Textile and Engineering Institute, Ichalkaranji, India.
3. I. A Patil, Technical Director, Adroit Engineers, MIDC Area Shiroli Kolhapur, India.

Table 5. Process FMEA

| PART NAME: GEAR PUMP ASSEMBLY | | | | | | FMEA DATE (START): | | | | | |
|---|---|---|---|---|---|---|---|---|---|---|---|
| PART NO: | | | | | | FMEA DATE (REV.): | | | | | |
| Process function/ Requirement | Potential failure mode | Potential Effects (S) of failure | S | Potential cause (S) of failure | O | Current process controls prevention of potential causes | Current process controls for detection of potential causes | D | RPN | Recommended action(S) | REVRPN |
| Inward Inspection after Blanking | Dimensions not as per Blanking Drawing | Next-Job location in jig not possible Sub-Nil Customer-Fittment problems EU-Reduced performance | 8 1 7 7 | No process control at supplier end | 1 | | Incoming inspection & supplier TC verification | 5 | 40 | | |
| Surface Grinding | High surface roughness | Next-Nil Sub-Leakage at testing | 1 8 | Wheel dressing not proper | 2 | | FPIR &IPIR | 5 | 80 | | |

| | | | | | | | | | | | |
|---|---|---|---|---|---|---|---|---|---|---|---|
| | | Customer-Leakage<br>EU-Reduced engine life | 8<br>7 | | | | | | | | |
| Common Drilling (F.P.& B.P.) | Drill I.D. Plus | Next-Nil<br>Sub- Nil<br>Customer-Loose fittment at assembly<br>EU-Reduced performance | 1<br>1<br>7<br>7 | Drill size incorrect | 2 | | FPIR &IPIR | 5 | 70 | | |
| | Drill I.D. Minus | Next-Nil<br>Sub-Assembly not possible<br>Customer-Fittment may not possible<br>EU-Reduced performance | 1<br>8<br>8<br>7 | Drill size incorrect | 2 | | FPIR &IPIR | 5 | 80 | | |
| 2 Hole Drilling (F.P.) | Drill I.D. Minus | Next-Nil<br>Sub-No discharge<br>Customer-No discharge<br>EU-Reduced performance | 1<br>8<br>8<br>7 | Operator not aware | 1 | | FPIR &IPIR | 7 | 56 | | |
| ø6.5 Drilling | Drilling & Reaming minus | Next-Boring location not possible<br>Sub-Pump fitment bolt will not pass through<br>Customer-Assy not possible<br>EU-Reduced performance | 8<br>8<br>8<br>7 | Drill size incorrect | 2 | | FPIR &IPIR | 5 | 80 | | |
| | Drilling & Reaming plus | Next-Uneven wall thickness<br>Sub-Assy with gear not possible<br>Customer-Assy with gear not possible<br>EU-Reduced performance | 7<br>8<br>8<br>7 | Drill size incorrect | 2 | | FPIR &IPIR | 5 | 80 | | |
| Ø 24 Boring M.P. | Bore Plus | Next-Nil<br>Sub-No | 1<br>8 | Insert broken | 3 | | FPIR & IPIR | 5 | 120 | SPC chart recommended | 80 |

| | | | | | | | | | | | |
|---|---|---|---|---|---|---|---|---|---|---|---|
| | | discharge<br>Customer-Loose fittment at assembly<br>EU-Reduced performance | 7<br>7 | due to high hardness of steel | | | | | | to TC with incoming inspection | |
| | Bore Minus | Next-Assy. Not possible<br>Sub-Nil<br>Customer-Fittment may not possible<br>EU-Reduced performance | 8<br>1<br>7<br>7 | Operator not competent | 1 | | FPIR & IPIR | 7 | 56 | | |
| ID Reaming Gear | ID Plus | Next-Nil<br>Sub-Pump jam at testing<br>Customer-Fitment not possible<br>EU-Engine seize | 1<br>8<br>8<br>7 | Drill size incorrect | 2 | | FPIR & IPIR | 5 | 80 | | |
| | ID Minus | Next-Job location not possible<br>Sub-Assy not possible<br>Customer-Fittment may not possible<br>EU-Reduced performance | 8<br>8<br>8<br>7 | Operator not aware | 1 | | FPIR & IPIR | 7 | 56 | | |
| OD Grinding | OD Plus | Next-Nil<br>Sub-Assy not possible<br>Customer-Fitment problem<br>EU-Reduced performance | 1<br>8<br>7<br>7 | Jobs not ready for dispatch | 2 | | FPIR & IPIR | 5 | 80 | | |
| | OD minus | Next-Nil<br>Sub-Assy not possible<br>Customer-Fitment problem<br>EU-Reduced performance | 1<br>8<br>7<br>7 | Jobs not ready for dispatch | 2 | | FPIR & IPIR | 5 | 80 | | |
| Inward Inspection after Teeth | Span variation more than | Next-Nil<br>Sub-if plus noisy ,if | 1<br>8 | Poor process control at | 2 | | Inspection | 5 | 80 | | |

| | | | | | | | | | | | |
|---|---|---|---|---|---|---|---|---|---|---|---|
| Cutting | 40 microns | minus, assy not possible Customer-if plus noisy ,if minus, assy not possible EU-Reduced performance | 8<br>7 | supplier end | | | | | | | |
| Inward Inspection after H.T. | High Hardness | Next-Nil Sub-Nil Customer-Wearing of F.P & B.P. EU-Reduced performance | 1<br>1<br>7<br>7 | No process control at supplier end | 1 | | Incoming inspection & supplier TC verification | 5 | 35 | | |
| | Low Hardness | Next-Nil Sub-Nil Customer-Wearing of gears EU-Reduced life | 1<br>1<br>7<br>7 | No process control at supplier end | 1 | | Incoming inspection & supplier TC verification | 5 | 35 | | |
| Pump Assembly | Assembly Tight | Next-Testing will not possible Sub-Nil Customer-Engine will not run EU-Engine seize | 8<br>1<br>8<br>8 | Operator not skilled | 2 | | Jamming test after assembly | 5 | 80 | | |
| Testing | Low pump pressure | Next-Nil Sub-Nil Customer-Engine will be seized EU-Engine will be seized | 1<br>1<br>7<br>7 | Gear width minus | 1 | | Pump testing by test rig | 5 | 35 | | |
| Packing | Low quantity in a box | Next-Nil Sub-Nil Customer-Dents on pump EU-Reduced performance | 1<br>1<br>7<br>7 | Sufficient jobs not available | 1 | | Visual Inspection | 8 | 56 | | |

**M162**

# REVIEW ON AUTO ROLL PUNCHING MACHINE DESIGN USING GENEVA MECHANISM

**Sushant Shinde[1], Amit Sasane[2], RohanPowar[3], Ranjit Talkar[4], Rushikesh Vibhute[5]**

*[1] [2] [3] [4] [5] Students, Department of Mechanical Engineering, D.K.T.E Society's TEI, Ichalkaranji*

**Prof. Vikas B. Magdum[6]**

*6] Faculty, Department of Mechanical Engineering, D.K.T.E Society's TEI, Ichalkaranji*

***Abstract*:In this work designing and fabricating of the prototype of Auto roll punching machine using Geneva mechanism is done. This work is specially designed for automatic punching in metal sheet. This work is to introduce automation in industries. The major components involved in this work are dc motor, cam arrangement, chain drive, Geneva mechanism and punching tool. In this work we are using two rollers for moving the sheet during operation. A dc motor is connected with cam. The cam has a pin which rotates the Geneva wheel. The Geneva wheel is attached to the chain drive. The other end of the chain drive is connected to the rollers which roll the metal sheet and the punching operation is done by the punch tool. It is suitable for making mass production of the sheet metal punching. On the conventional punching machine the timefor job setting, marking, punching operation is more. Labor cost is also more. With Geneva based punching machine the time for job setting, marking, punching, labor cost decreases and also less maintenance cost.**

*Key Words: Geneva wheel, Cam drive, DC motor, Punching tool, Chain drive.*

## 1. Introduction

The Geneva drive or Maltese cross is a gear mechanism that translates a continuous rotation into an intermittent rotary motion. The rotating drive wheel has a pin that reaches into a slot of the driven wheel advancing it by one step. The drive wheel also has a raised circular blocking disc that locks the driven wheel in position between steps.

The name derives from the device's earliest application in mechanical watches; Geneva in Switzerland being an important center of watch making. The Geneva drive is also commonly called a Maltese cross mechanism due to the visual resemblance when the driven wheel has four spokes. Since they can be made small and are able to withstand substantial mechanical stress, these mechanisms are frequently used in watches.

In the most common arrangement, the driven wheel has four slots and thus advances by one step of 90 degrees for each rotation of the drive wheel. If the driven wheel has n slots, it advances by 360°/n per full rotation of the drive wheel.

## 2. Description of Equipment

### 2.1 Motor

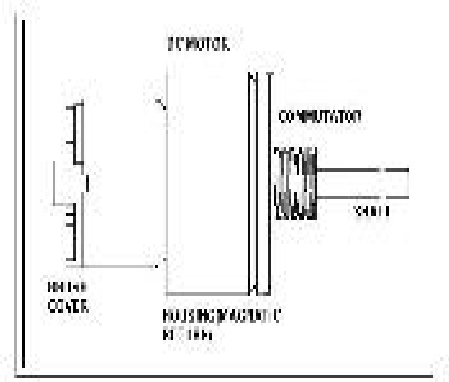

Fig1. DC Motor

Every DC motor has six basic parts -- axle, rotor (armature), stator, commutator, field magnet(s), and brushes. In most common DC motors, the external magnetic field is produced by high-strength permanent magnets. The stator is the stationary part of the motor -- this includes the motor casing, as well as two or more permanent magnet pole pieces. The rotor (together with the axle and attached commutator) rotates with respect to the stator. The rotor consists of windings (generally on a core), the windings being electrically connected to the commutator. The above diagram shows a common motor layout -- with the rotor inside the stator (field) magnets.

The geometry of the brushes, commutator contacts, and rotor windings are such that when power is applied, the polarities of the energized winding and the stator magnet(s) are misaligned, and the rotor will rotate until it is almost aligned with the stator's field magnets. As the rotor reaches alignment, the brushes move to the next commutator contacts, and energize the next winding. Given our example two-pole motor, the rotation reverses the direction of current through the rotor winding, leading to a "flip" of the rotor's magnetic field, driving it to continue rotating.

## 2.2 Geneva Wheel

The Geneva wheel, or Maltese cross, is a cam like mechanism that provides intermittent rotary motion & is widely used in both low and high-speed machinery. Although originally developed as a stop to prevent over winding of watches, it is now extensively used in automatic machinery, e.g. where a spindle, turret, or worktable must be indexed. It is also used in motion picture workers to provide the intermittent advance of the film.

## 2.3 Punch

The punching die is made out of mild steel. The movable die or male die has the dimension of the hole, profile required and the female die has the cavity. A Die set consists of a set of (male) punches and (female) dies which, when pressed together, may deform the work piece in some desired manner. The punches and dies are removable with the punch being temporarily attached to the end of a ram during the punching process. The ram moves up and down in a vertically linear motion.

## 2.4 Chain Drive

Chain drive is a way of transmitting mechanical power from one place to another. It is often used to convey power to the wheels of a vehicle, particularly bicycles and motorcycles. It is also used in a wide variety of machines besides vehicles. The power is conveyed by a roller chain, known as the drive chain, passing over a sprocket gear, with the teeth of the gear meshing with the holes in the links of the chain. The gear is turned, and this pulls the chain putting mechanical force.

## 2.5 Rollers

In this work we are using two rollers for moving the sheet during operation. When the Geneva wheel rotates, the sprocket wheel also rotates which in turn rotates the rollers attached to the other sprocket wheel. The two sprocket wheels are connected by a roller chain. With the help of rollers the paper moves forward and the punching operation is done on it.

## 3. Working

When the motor is powered the cam drive disc is rotated. The linear rod which is attached to the cam drive disc with eccentricity from the center is reciprocated on the punching machine. The punching machine consists of a punch head, when the linear rod is moved down it presses the punch head. The punch head consists of punch tools which punches the paper in required manner.The cam drive disc has a pin attached to it, which enters into the slot of the Geneva wheel and turns the Geneva wheel. For every one rotation of cam drive disc, the Geneva wheel rotates 1/4th of the rotation. The shaft of the Geneva wheel is attached to the sprocket wheel. When the Geneva wheel rotates, the sprocket wheel also rotates which in turn rotates the rollers attached to the other sprocket wheel. The two sprocket wheels are connected by a roller chain. With the help of rollers the paper moves forward and the punching

## 4. DESIGN

### 4.1 Design of Geneva mechanism

- Geneva wheel radius (b) = 75 mm
- No. of slots in Geneva wheel (n) = 4
- Drive pin diameter (p) = 8 mm
- Allowed clearance (t) = 2 mm
- Centre distance (c) = $\frac{b}{\cos(\frac{180}{n})} = \frac{75}{\cos(\frac{180}{4})}$ = 106 mm
- Drive crank radius (a) = $\sqrt{c^2 - b^2} = \sqrt{106^2 - 75^2}$ = 75 mm
- Slot center length (s) = (a + b) - c = (75 + 75) – 106 = 44 mm
- Width of slot (w) = p + t = 8 + 2 = 10 mm
- Angle between two slots (θ) = 2 x 180/n = 2 x 180/4=90º
- Angle at the entrance of the pin into the slot (Ø) = 45º
- Stop arc radius (y) = a – (p x 1.5) = 75 – (8 x 1.5) = 63 mm
- Thickness of Geneva wheel (h) = 6 mm
- Stop disc radius (z) = y – t = 63 – 2 = 61 mm
- Thickness of crank drive (i) = 9mm
- Height of pin = h + t = 6 + 2 = 8mm
- Distance of drive pin from the center of the disc (a) = 75 mm
- Number of revolutions per minute (N) = 51 rpm
- Total cycle time ($T_c$) = 1/N = 1/51 = 0.0196 min
- Available service time per cycle ($T_s$) = (180 + θ)/360 x N = (180 + 90)/360 x 51=0.014 min
  - Dwell time or processing time

$(T_d) = (180 - \theta)/360 \times N = (180 - 90)/360 \times 51 = 4.901 \times 10^{-3}$ min

### 4.2 Design of roller chain drive

- Pitch of chain (p) = 3.17 mm
- No. of teeth on smaller sprocket Z1 = 18 teeth
- No. of teeth on larger sprocket Z2 = 28 teeth
- Diameter of smaller sprocket d1 = 70 mm
- Diameter of larger sprocket d2 = 130 mm
- No. of links in roller chains = 49 links
- Center distance between two sprocket wheels = 410 mm

### 4.3 Motor calculations

- Current (I) = 1.5 Amps
- Voltage (V) = 12 V
- The consumed electric power of the motor (Pin) = I x V = 1.5 x 12 = 18 W
- The output mechanical power of the motor (Pout) =T x ωout Watts
- The speed of the motor (N) = 51 x 20 = 1020 rpm
- The actual Torque of the motor (Tin) = Eb x Ia x 60 / 2 x π x N=9.55 x 1.5 x 60 / 2 x 3.14 x 1020=0.1341 N-m
- Angular speed ($\omega_{out}$) = 2 x π x rpm / 60 = 2 x 3.14 x 1020 / 60 = 106.8 rad/sec
- Pout = 0.3141 x 106.8 = 14.3 W
- Efficiency of motor = Pout / Pin = 14.3 / 18=0.794 x 100 = 79.4%
- Input angular speed ($\omega_{in}$) = 2 x π x rpm / 60=2 x 3.14 x 51 / 60 = 5.34 rad/sec
- Fundamental equation for Gear pair = Tout / Tin=$\omega_{out}$ / $\omega_{in}$ = Tout / 0.1341 = 106.8 / 5.34
- Tout = 6.282 N-m

### 4.4 Puncher specifications

- Punching diameter = 5.5 mm
- Punching distance = 80 mm
- Punching Capacity = 22 sheets

### 4.5 Roller specification

- Diameter of Rollers = 45 mm
- Length of the rollers = 430 mm
- Center distance between two rollers = 45 mm

### 4.6 Drafting of Auto Roll Punching Machine

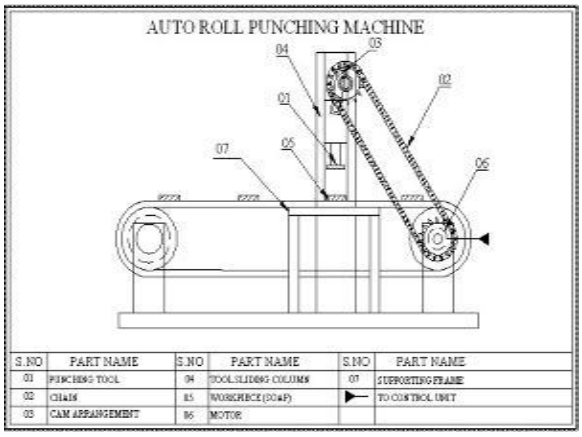


**Fig2. Auto Roll Punching Machine**

## 5. RESULTS

### 5.1 Power required to Punch

- Power required to punch (p) = 2πNT/60 W
- Torque input to the cam drive (Tin) = 6.22 N-m
- The output torque of cam drive (T) = Tin (√2 cosθ – 1)= 6.22 (√2 cos0 – 1) = 2.57 N-m (At maximum acceleration θ = 0)
- Power required to punch = 2 x π x N x T / 60=2 x 3.14 x 51 x 2.57 / 60=13.72 W

### 5.2 Punching done on papers

- Hole diameter (d) = 5.5 mm
- Thickness of the paper (t) = 0.5 mm
- Ultimate shear stress of a carbonless paper(τ) = 500 KPa
- Area under shear stress A = π x d x t mm2

  = π x 5.5 x 0.5
  = 8.63 mm2

- **Force required to punch** F = A x τ Newton

  = 8.63 x 0.5
  = 4.315 N

### 5.3 Punching on G. I. Sheet

- Hole diameter= 5.5 mm
- Thickness of sheet= 0.5 mm
- Ultimate shear strength of galvanized iron sheet(τ) = 800 KPa
- Area under shear stressA = π x d x t mm2

  = π x 5.5 x 0.5
  = 8.63 mm2

- Force required to punchF = A x τ N

  = 8.63 x 0.8
  = 6.904 N

## 6. CONCLUSION

1. The project carried out by us is used to make punching on paper and G. I. Sheet with more prescribed than a conventional punching machine.

2. As conventional punching machine takes more time for job setting, marking, punching operation, labor cost is also more. With this Geneva wheel based auto roll punching machine the time taken for all this process can be reduced and production time also reduced and production rate will be high.

3. No extra skill is required for operating this system. Operation is very smooth and in this system we can get more output by applying less effort.

4. It is very much useful for making series of holes of same diameter and constant pitch. Thus it can be useful for punching application.

**REFERENCES**

1. "Design of Geneva Wheel Based Auto-Roll'Punching Machine" - Mr. R. Syam Sudhakar Rao, A. Hari Tej, C. Siva Sai
2. "Design & Fabrication of Auto Roll Punching Machine"- Mr. Kundan Kumar
3. "Design & Analysis of Geneva Mechanism"-Jung-Fa Hsich
4. "Automatic Punching Machine"- Arun S, Shree Rajendra, Vijayavithal Bongale
5. "Design of a Micromachined Geneva Wheel as a mechanism"-Palani Kumaresan, Varadarajan Vidya

**M163**

# Design and Development of Supply Chain Agility Assessment Model for a Manufacturing Organization

Prof Gopinath H.Rathod
Dept of Mechanical Engineering
Basaveshwar Engineering College
Bagalkot, India
gopinath.rathod@gmail.com

Mr Subhas.S.Ratnakar
Dept of Mechanical Engineering
Basaveshwar Engineering College
Bagalkot, India
subhasratnakar@gmail.com

***Abstract*—Increasing competition and dynamic customers'demands has marked the evolution of a new manufacturing paradigm called Agile Manufacturing. Supply Chain Management is an essential ingredient of Agile Manufacturing. Contemporary supply chains have acquired agile characteristics such as volatile market demand, high product variety, high profit margin, short product life cycle etc. In this regard, the quantification of supply chain agility gains extreme importance as it indicates the strategic agile position of an organization from supply chain perspective. This project work begins with the development of supply chain agility assessment model based on the literature review. The model is comprehensive in nature as it includes twenty different agile supply chain criteria and various agile supply chain attributes. Fuzzy logic approach has been used to compute supply chain agility. The case study has been carried out at manufacturing organization situated in Tiruchirappalli. The output of the case study includes the supply chain agility index, fuzzy performance important index of various agile supply chain attributes and the identification of principal obstacles. Various proposals for supply chain agility improvement have been derived which on implementation will lead to enhancement of profitability and increase in customer domain of the organization.**

***Keywords—Agile Manufacturing; Supply chain management, Fuzzy logic; Manufacturing Systems.***

## I. INTRODUCTION

The demand conditions of markets are increasing due to varied customers' requirements. This situation has marked the emergence of a new manufacturing paradigm called Agile Manufacturing (AM). AM enables an organization to produce a variety of products within a short period of time in a cost effective manner. Supply chain management (SCM) is one of the managerial enablers of AM. Some of the attributes of agile supply chain include high product variety, cost effectiveness and short product life cycle. In this context, the quantification of supply chain agility gains importance as it is an indicator of strategic agile position of an organisation from supply chain perspective. This paper documents the assessment of supply chain agility of manufacturing organization using fuzzy logic approach.

## II. LITERATURE REVIEW

The literature has been reviewed from two perspectives namely on agile supply chains and assessment of supply chain agility. Gunasekaran (1998) has proposed Virtual enterprise formation tools, physically distributed teams, rapid partnership formation tools/ metrics, concurrent engineering, integrated product/production/ business information system, rapid prototyping tools and electronic commerce as enablers of AM. Lou et al. (2004) have defined agile supply chain as a network from the topologic structure which is composed of autonomous or semi-autonomous enterprises. Eshlaghy et al. (2009) have suggested a supply chain agility model and discussed about the concepts of that model. Yang and Li (2002) have proposed a procedure to assess agility using fuzzy logic approach for mass customised product manufacturing. Lin et al. (2006) have utilized fuzzy logic approach for assessing supply chain agility of manufacturing organization. Bottani (2009) has proposed the application of fuzzy Quality Function Deployment (QFD) approach for achieving agility. Ganguly et al. (2009) have proposed three techniques and associated metrics for determining enterprise agility.

## III. CASE STUDY

This section deals with the current characteristics of agile supply chain and the application of fuzzy logic approach for assessing the supply chain agility for a case company.The current characteristics of Agile Supply Chain prevailing at case company are shown in Table I.

TABLE I. CURRENT CHARACTERISTIC OF AGILE SUPPLY CHAIN

| SI No | Agile supply chain attributes | Current characteristic of agile supply chain |
|---|---|---|
| 1 | Incorporation of IT utilities in SCM | Intranet facility has been used to generate the production plan from the marketing plan which indicates the in-house capacity as well as quantity to be outsourced. |

| SI No | Agile supply chain attributes | Current characteristic of agile supply chain |
|---|---|---|
| 2 | Supplier involvement in product development | For critical components suppliers are called for discussion during design stage so as to incorporate the required features, For noncritical components, drawings are sent to suppliers so as to finalize the changes in product design. |
| 3 | SCM concepts for enhancing the outsourcing efficiency | Efficiency of outsourcing has been enhanced by providing technical support to the suppliers so as to reduce their bottleneck operations. |
| 4 | Distribution networks | Distribution network has been currently designed in such a way that logistics system has been used effectively in a regular schedule for transporting the goods. Distribution center are also located in nearby cities. |
| 5 | Transportation models | Reasons for the delay by the logistic providers are discussed periodically once in two months during special meeting so as to improve the output. |
| 6 | Warehousing and Procurement function | Warehouses are being located in nearby cities by the suppliers to improve the delivery speed. |
| 7 | Order Processing | A single executive has been employed exclusively for monitoring the transactions on regular basis. |
| 8 | Material planning | Planning for materials has been done in line with the production planning and discussed during daily production meeting. |
| 9 | IT/IS on reverse logistics | The concepts of reverse logistics are not applicable to the organization. |
| 10 | Strategic logistic network | Standard operating procedure has been delivered to the logistic providers periodically. |
| 11 | Virtual logistics | The logistic function has been executed manually in the organization |
| 12 | Demand Supply planning | Synchronization and micro level planning has been done to balance demand and supply |
| 13 | Order fulfillment | A review has been done every day in the daily production meeting about the order fulfillment so as to fill the gaps. |
| 14 | Manufacturing capabilities | Competent personnel are grouped to form a team to evaluate the suppliers. Assessment procedure includes manufacturing capabilities as one of the supplier evaluation criteria. |
| 15 | Continuous structure | Dedicated suppliers are being added to the approved supplier list of the organization. |
| 16 | Process and technological capabilities | It has been included as one of the criteria in supplier evaluation. |
| 17 | Long-term relationship potential | Dependency matrix has been constructed to identify the dedicated suppliers on the basis of business values so as to ensure long term relationship. |
| 18 | Flattened Organizational structure | Number of levels in the hierarchy has been reduced to form a flattened structure in the organization. |
| 19 | Team oriented decision making | A cross functional team has been formed at organization and department levels to discuss various issues and facilitate better decision making. |
| 20 | Interchange-ability of personnel | Interchange-ability of personnel between departments exists. |
| 21 | Team formation and management | Both team formation and organizational management exist in the organization. |
| 22 | Learning organization | Different forms of training are conducted at various levels to ensure the learning culture. |
| 23 | Concurrent relationship of supply chain activities | There exists relationship between marketing plan, supplier procurement plan and production plans. |
| 24 | Focus on core competencies | Competency development system has been evolved to assess the competence of workforce. |
| 25 | Team based goal setting | Goals of the organization has been set every year and reviewed by the president of organization with other executives. |
| 26 | Active data sharing with partners | Annual vendor meeting has been conducted every year in which data has been shared with suppliers from the perspective of problems faced as well as solution for the problems. |
| 27 | Interlinking of departments | Based on the goals set for the organization, actions have been developed and activities have been assigned to various departments. |

Linguistic assessment is preferred to numerical assessment due to imprecise and ambiguous criteria in agility evaluation. Improvised usage of linguistic terms and corresponding membership functions is characteristic of fuzzy logic. The linguistic terms are used to assess the performance rating and important weights of agile attributes. The linguistic terms and the corresponding fuzzy numbers have been adopted from previous studies as well as the expert team have approved their usage. In order to assist in assigning the performance rating of agile attributes, the linguistic variables (Excellent (E), Very Good (VG), Good (G), Fair (F), Poor (P), Very Poor (VP) and Worst (W)) are used. In order to assess the importance weights of agile attributes, the linguistic variables (Very High (VH), High (H), Fairly High (FH), Medium (M), Fairly Low (FL), Low (L), and Very Low (VL)) are used. The linguistic variables and fuzzy numbers used in this paper are shown in Table II. As a sample, the linguistic variables for assessing the performance ratings, importance weights of 'Virtual Enterprise/Organization' gathered from 7 executives of case company are shown in Table III and Table IV.

TABLE II. LINGUISTIC VARIABLES AND FUZZY NUMBER USED

| Linguistic variable | Fuzzy number | Linguistic variable | Fuzzy number |
|---|---|---|---|
| Worst (W) | (0, 0.5, 1.5) | Very Low (VL) | (0, 0.05, 0.15) |
| Very Poor (VP) | (1, 2, 3) | Low (L) | (0.1, 0.2, 0.3) |
| Poor (P) | (2, 3.5, 5) | Fairly Low (FL) | (0.2, 0.35, 0.5) |
| Fair (F) | (3, 5, 7) | Medium (M) | (0.3, 0.5, 0.7) |
| Good (G) | (5, 6.5, 8) | Fairly High (FH) | (0.5, 0.65, 0.8) |
| Very Good (VG) | (7, 8, 9) | High (H) | (0.7, 0.8, 0.9) |
| Excellent (E) | (8.5, 9.5, 10) | Very High (VH) | (0.85, 0.95, 1.0) |

TABLE III. LINGUISTIC VARIABLES OF PERFORMANCE RATING PROVIDED BY EXPERTS PERTAINING TO AGILE SUPPLY CHAIN ENABLER 'VIRTUAL ENTERPRISE/ORGANIZATION'

| SN | Enablers | Criteria | Attributes | $E_1$ | $E_2$ | $E_3$ | $E_4$ | $E_5$ | $E_6$ | $E_7$ |
|---|---|---|---|---|---|---|---|---|---|---|
| 1 | $ASCE_1$ | $ASCC_1$ | $ASCA_{11}$ | G | F | VG | F | G | G | E |
| | | | $ASCA_{12}$ | F | G | F | G | F | F | G |
| | | | $ASCA_{13}$ | F | G | P | G | G | G | E |
| | | $ASCC_2$ | $ASCA_{21}$ | F | G | F | G | G | G | VG |
| | | | $ASCA_{22}$ | F | G | G | F | VG | F | VG |
| | | | $ASCA_{23}$ | F | G | G | G | G | F | G |
| | | | $ASCA_{24}$ | F | G | G | G | G | VG | VG |
| | | | $ASCA_{25}$ | G | G | G | G | G | F | VG |
| | | | $ASCA_{26}$ | VP | P | F | - | P | - | VG |
| | | | $ASCA_{27}$ | F | G | G | F | G | P | VG |
| | | | $ASCA_{28}$ | P | VP | F | G | G | P | G |
| | | $ASCC_3$ | $ASCA_{31}$ | F | G | F | G | G | G | VG |
| | | | $ASCA_{32}$ | G | G | G | VG | G | G | VG |
| | | $ASCC_4$ | $ASCA_{41}$ | F | G | G | VG | VG | G | E |
| | | | $ASCA_{42}$ | G | G | G | G | G | G | VG |
| | | | $ASCA_{43}$ | P | G | G | VG | G | G | VG |
| | | | $ASCA_{44}$ | G | G | G | VG | G | G | G |
| | | $ASCC_5$ | $ASCA_{51}$ | G | G | VG | VG | VG | VG | VG |
| | | | $ASCA_{52}$ | VG | F | VG | VG | VG | G | VG |
| | | | $ASCA_{53}$ | G | F | VG | G | G | F | VG |
| | | | $ASCA_{54}$ | VG | F | E | G | G | G | VG |

TABLE IV. LINGUISTIC VARIABLES OF IMPORTANCE WEIGHTS PROVIDED BY EXPERTS PERTAINING TO AGILE SUPPLY CHAIN ENABLER 'VIRTUAL ENTERPRISE/ORGANIZATION'

| SN | Enablers | Criteria | Attributes | $E_1$ | $E_2$ | $E_3$ | $E_4$ | $E_5$ | $E_6$ | $E_7$ |
|---|---|---|---|---|---|---|---|---|---|---|
| 1 | $ASCE_1$ | $ASCC_1$ | $ASCA_{11}$ | H | M | H | VH | H | M | FH |
| | | | $ASCA_{12}$ | H | FH | M | FH | H | H | FH |
| | | | $ASCA_{13}$ | FH | FH | FL | FH | H | H | H |
| | | $ASCC_2$ | $ASCA_{21}$ | H | FH | M | M | FH | H | H |
| | | | $ASCA_{22}$ | FH | FH | FH | H | VH | FH | H |
| | | | $ASCA_{23}$ | M | FH | H | H | H | H | H |
| | | | $ASCA_{24}$ | H | FH | H | FH | H | M | VH |
| | | | $ASCA_{25}$ | VH | FH | H | H | VH | H | H |
| | | | $ASCA_{26}$ | L | FL | FL | - | L | VL | VH |
| | | | $ASCA_{27}$ | H | FH | FH | FH | H | FH | H |
| | | | $ASCA_{28}$ | H | L | M | H | H | L | H |
| | | $ASCC_3$ | $ASCA_{31}$ | H | FH | M | FH | VH | FH | VH |
| | | | $ASCA_{32}$ | H | FH | FH | H | H | H | VH |
| | | $ASCC_4$ | $ASCA_{41}$ | VH | FH | FH | H | VH | H | VH |
| | | | $ASCA_{42}$ | H | FH | FH | FH | H | H | H |
| | | | $ASCA_{43}$ | H | FH | H | H | VH | H | H |
| | | | $ASCA_{44}$ | VH | FH | H | H | VH | H | VH |
| | | $ASCC_5$ | $ASCA_{51}$ | FH | FH | H | H | H | VH | H |
| | | | $ASCA_{52}$ | H | M | H | H | VH | VH | H |
| | | | $ASCA_{53}$ | H | M | H | FH | H | H | FH |
| | | | $ASCA_{54}$ | VH | M | H | FH | VH | VH | FH |

Similarly, the linguistic variables for assessing the performance ratings, importance weights of other agile supply chain enablers also have been gathered.

### A. *Aggregation of Fuzzy Rating and Fuzzy Weights of Agile Supply Chain*

Arithmetic mean, median, and mode are some of methods that can be adopted to aggregate the assessments of multiple decision-makers. The average operation is the most widespread aggregation method, as this study uses the arithmetic mean to pool the opinions of experts (Lin et al. 2006). The average fuzzy ratings is given by Rj and average performance weights is given by Wj

$$R_j = (a_j, b_j, c_j) = (R_{j1}(+)R_{j2}(+).....(+)R_{jm})/m \quad (1)$$

$$W_j = (x_j, y_j, z_j) = (W_{j1}(+)W_{j2}(+)W_{jm})/m \quad (2)$$

Consolidated fuzzy rating and fuzzy weights are used to determine the supply chain agility level.

Fuzzy Agility Index (FAI)

$$FAI = \sum_{j=1}^{n} (W_j \odot R_j) \Big/ \sum_{j=1}^{n} W_j \qquad (3)$$

The Table V documents the aggregated fuzzy ratings and fuzzy weights of main and sub criteria.

TABLE V. AVERAGE FUZZY RATING AND AVERAGE FUZZY WEIGHTS PERTAINING TO AGILE SUPPLY CHAIN ENABLER 'VIRTUAL ENTERPRISE/ORGANIZATION'

| Attributes | Fuzzy average ratings | Fuzzy average weights |
|---|---|---|
| $ASCA_{11}$ | (5.21, 6.71, 8.14) | (0.58, 0.714, 0.84) |
| $ASCA_{12}$ | (3.86, 5.64, 7.43) | (0.56, 0.693, 0.82) |
| $ASCA_{13}$ | (4.79, 6.29, 7.71) | (0.54, 0.671, 0.8) |
| $ASCA_{21}$ | (4.71, 6.29, 7.86) | (0.53, 0.671, 0.81) |
| $ASCA_{22}$ | (4.71, 6.29, 7.86) | (0.61, 0.736, 0.85) |
| $ASCA_{23}$ | (4.43, 6.07, 7.71) | (0.61, 0.736, 0.85) |
| $ASCA_{24}$ | (5.29, 6.71, 8.14) | (0.61, 0.736, 0.84) |
| $ASCA_{25}$ | (5.00, 6.5, 8.00) | (0.71, 0.821, 0.91) |
| $ASCA_{26}$ | (2.14, 3.14, 4.14) | (0.21, 0.3, 0.39) |
| $ASCA_{27}$ | (4.29, 5.86, 7.43) | (0.59, 0.714, 0.84) |
| $ASCA_{28}$ | (3.29, 4.79, 6.29) | (0.47, 0.586, 0.7) |
| $ASCA_{31}$ | (4.71, 6.29, 7.86) | (0.6, 0.736, 0.85) |
| $ASCA_{32}$ | (5.57, 6.93, 8.29) | (0.66, 0.779, 0.88) |
| $ASCA_{41}$ | (5.79, 7.14, 8.43) | (0.71, 0.821, 0.91) |
| $ASCA_{42}$ | (5.29, 6.71, 8.14) | (0.61, 0.736, 0.85) |
| $ASCA_{43}$ | (5.14, 6.5, 7.86) | (0.69, 0.8, 0.9) |
| $ASCA_{44}$ | (5.29, 6.71, 8.14) | (0.74, 0.843, 0.92) |
| $ASCA_{51}$ | (6.43, 7.57, 8.71) | (0.66, 0.779, 0.88) |
| $ASCA_{52}$ | (6.14, 7.36, 8.57) | (0.69, 0.8, 0.9) |
| $ASCA_{53}$ | (5.00, 6.50, 8.00) | (0.59, 0.714, 0.84) |
| $ASCA_{54}$ | (5.79, 7.14, 8.43) | (0.65, 0.779, 0.88) |
| $ASCA_{55}$ | (6.86, 8.04, 9.00) | (0.75, 0.864, 0.94) |

**The Fuzzy agility index (FAI) of Case Company is (6.41, 7.33, 7.89)**

### *B. Determination of Euclidean distance to match FAI with approximate agility level*

Once the FAI has been obtained, it can be matched with linguistic level. Euclidean distance method is the most widely used method for matching the membership function with linguistic term since it is the most intuitive method for humans to use in perceiving proximity (Guesgen and Albrecht, 2000). In our paper, the agility level (AL) has been set as (Extremely Agile [EA], Very Agile [VA], Agile [A], Fairly [F], Slowly [S]) has been selected for labeling. Euclidean distance has been used to find the distance between FAI and AL.

Extremely Agile [EA]=(7,8.5,10)
Very Agile [VA]=(5.5,7,8.5)
Agile [A]=(3.5,5,6.5)
Fairly [F]=(1.5,3,4.5)
Slowly [S]=(0,1.5,3)

The membership function used for calculating FAI is given by,

$$f_i(x) = \begin{cases} (x-a)/(b-a), & a \le x \le b, \\ (x-c)/(c-b), & b \le x \le c, \\ 0, & otherwise \end{cases} \qquad (4)$$

For FAI

$$f_A(x) = \begin{cases} (x-6.41)/0.92, & 6.41 \le x \le 7.33, \\ (x-7.89)/0.56, & 7.33 \le x \le 7.89, \\ 0, & otherwise \end{cases}$$

$$d(FAI,\ AL_i) = \left\{ \sum_{x \in \beta} \left( f_{FAI}(x) - f_{AL}(x) \right)^2 \right\}^{1/2} \qquad (5)$$

As a sample, the Euclidean distance calculation for the linguistic variable "Very Agile" has been shown in Table VI

TABLE VI. SAMPLE EUCLIDEAN DISTANCE CALCULATION FOR THE LINGUISTIC VARIABLE "VERY AGILE"

| x | FAI | VA | FAI-VA | $(FAI-VA)^2$ |
|---|---|---|---|---|
| 0 | 0 | 0 | 0 | 0 |
| 0.5 | 0 | 0 | 0 | 0 |
| 1 | 0 | 0 | 0 | 0 |
| 1.5 | 0 | 0 | 0 | 0 |
| 2 | 0 | 0 | 0 | 0 |
| 2.5 | 0 | 0 | 0 | 0 |
| 3 | 0 | 0 | 0 | 0 |
| 3.5 | 0 | 0 | 0 | 0 |
| 4 | 0 | 0 | 0 | 0 |
| 4.5 | 0 | 0 | 0 | 0 |
| 5 | 0 | 0 | 0 | 0 |
| 5.5 | 0 | 0 | 0 | 0 |
| 6 | 0 | 0.333333 | -0.33333 | 0.111111 |
| 6.5 | 0.097087 | 0.666667 | -0.56958 | 0.324421 |
| 7 | 0.636462 | 1 | -0.36354 | 0.13216 |
| 7.5 | -0.70736 | -0.66667 | -0.04069 | 0.001656 |
| 8 | 0 | -0.33333 | 0.333333 | 0.111111 |
| 8.5 | 0 | 0 | 0 | 0 |
| 9 | 0 | 0 | 0 | 0 |
| 9.5 | 0 | 0 | 0 | 0 |
| 10 | 0 | 0 | 0 | 0 |
| | | | | 0.680459 |
| | | | $\sqrt{(FAI-VA)^2}$ = | 0.8248 |

D (FAI, EA) = 1.870
D (FAI, VA) = 0.824
D (FAI, F) = 1.736
D (FAI, S) = 1.736
D (FAI, A) = 1.736

By matching a linguistic label with minimum D, the agility level of case company has been identified as "**VeryAgile**".

*C. Identification of Importance Index of various Agile Supply Chain Attributes*

Agility evaluation procedure must not be stopped with determination of agility Level; it must identify principle obstacles for improvement. FPII (Fuzzy Performance Importance Index), it used to identify the principle obstacles. FPII is calculated as

$$FPII_{ijk} = W'_{ijk} \otimes R_{ijk}$$

$$\text{Where } W'_{ijk} = (1,1,1) - W'_{ijk} \qquad (6)$$

W´ijk is the fuzzy importance weight of the agility element capability ijk.

FPII needs to be ranked using Chen and Hwang and Left-and- Right Fuzzy Ranking method for various Agile Supply Chain Attributes. The advantage of this method is that it not only preserves the ranking order but also considers the absolute location of each fuzzy number. FPII can be obtained using following equations.

$$f_{\max}(x) = \begin{cases} x, & 0 \leqslant x \leqslant 10 \\ 0, & \text{otherwise} \end{cases} \qquad (7)$$

$$f_{\min}(x) = \begin{cases} 10 - x, & 0 \leqslant x \leqslant 10 \\ 0, & \text{otherwise} \end{cases} \qquad (8)$$

When given a triangular fuzzy number FPII defined as ∫FPII:

R→ [0, 10], with a triangular

Membership function, the right-and-left scores of FPII can be obtained, respectively, as

$$U_R(FPII) = \sup_x \left[ U_{FPII}(x) \wedge U_{\max}(x) \right] \qquad (9)$$

$$U_L(FPII) = \sup_x \left[ U_{FPII}(x) \wedge U_{\min}(x) \right] \qquad (10)$$

Finally, the total score of FPII can be obtained by combining the left-and-right-scores. The total score of FPII is defined as

$$U_T(FPII) = \left[ U_R(FPII) + 10 - U_L(FPII) \right] / 2 \qquad (11)$$

Using the total score, the fuzzy numbers can be ranked. For example, the total scoring value of a fuzzy number FPII11 (1.053, 2.205, 3.418) is calculated as

$$U_R(FPII) = \sup_x \left[ U_{FPII}(x) \wedge U_{\max}(x) \right] = 3$$

$$U_L(EPII) = \min[U_{\_\_\_}(x) \times U_{\_\_\_}(x)] = 8.2$$

$$U_L(EPII) = [U_{\_\_\_}(x) + U_{\_\_\_}(x)]/2 = [3 + 10 - 8.2]/2 = \mathbf{2.41}$$

As above, total score of agile supply chain attribute 'Incorporation of IT utilities in SCM' is found as 2.41.

Similarly, scores have been computed for all 86 agile supply chain attributes.

## IV.CONCLUSION

The manufacturing organisations are facing the pressure to transform their manufacturing paradigm. Agile manufacturing is a 21st century modern manufacturing paradigm which enables the organisations to survive in the competitive dynamic environment (Lou et al. 2004). Supply chain management is an essential constituent of agile manufacturing. The quantification of supply chain agility gains vital importance in the modern industrial scenario (Yusuf 2003). In this context, this paper has been carried out for assessing the supply chain agility of case company. After determining the supply chain agility level of case company, the importance index of various agile supply chain attributes at case company has been found. This is followed by the derivation of various proposals for supply chain agility improvement. The practical validation of the case study has been done in consultation with the executives of case company which indicated the practical feasibility of deploying supply chain agility assessment in the industrial scenario.

## REFERENCES


[1] Chopra, S., Meindl, P and Kalra D.V., Supply Chain Management strategy, planning and operation. Dorling Kindersley India pvt. Ltd., 2007. 3rd Edition.

[2] Elmuti, D., Minnis, W and Abebe, M., Longitudinal assessment of an integrated industrial supply chain. An International Journal of supply chain management, 2008, 13(2), 151–159.

[3] Eshlaghy, T., Rajabzadeh, A., Nikoomaram, G.H. and Zandhessami, H., Process Based Agile Supply Chain Model. Contemporary Engineering Sciences, 2009, 3, 117 – 138.

[4] Gunasekaran, A., Lai, K-h.., and Cheng, T.C.E., Responsive supply chain a competitive strategy in a networked economy. Omega, 2008, 36(4), 549-564.

[5] Gunasekaran, A., and Yusuf, Y., Agile manufacturing: A taxonomy of strategic and technological imperatives. *International Journal ofProduction Research,* 2002,**40**(6), 1357–1385.

[6] Iskanius, P., An agile supply chain for a project-oriented steel product network. Academic Dissertation, University of Oulu, 2006.

[7] Lin, C.T., Chiu, H. and Tseng, Y-H., Agility index in the supply chain. International Journal of Production Economics, 2006, 100, 285-299.

[8] Lou., Zu-de, P.L., Chenyu, Y and Wu, A., Study on multi-agent-based agile supply chain management. International Journal of Advanced Manufacturing Technology, 2004, 23 197–203.

[9] Paneerselvam, R. Operations Management, Prentice Hall of India Private Limited, New Delhi, 2002, 1st Edition.

[10] Viharos, Z, J, B., Kádár, L., Monostori, Z., Kemény, B., Csáji, A., Pfeiffer and Karnok D., Integration of production, Quality and process monitoring for agile manufacturing. XVIII Imeko World Congress metrology for a sustainable development, rio de janeiro, brazil, 2006.

[11] Yusuf, Y.Y., Gunasekaran, A., Adeleye, C and Sivayoganathan, K., Agile supply chain capabilities: Determinants of competitive objectives. European Journal of Operational Research, 2004, 159, 379–392.

**M164**

# Design, Development and Modeling of Human Powered Forklift

Chougule Rohan[1] Patil Omkar[2] Darade Balasaheb[3] JadhavPrithwiraj[4] Balakrishna Khot[5]

*1,2,3,4 UG student, Department of Mechanical engineering, DKTE Socitey's Textile and Engineering Institute, Ichalakaranji, Maharashtra, India.*

*5 Assistant Professor, Department of Mechanical engineering, DKTE Socitey's Textile and Engineering Institute, Ichalakaranji, Maharashtra, India*

***Abstract* -Many industries use forklifts for lifting heavy goods etc. These are applicable for large scale industries and highly automated industries. Since the small scale industries require repeated movements of load from one station to another the use of these fork lift will not be economical. Hence we decided to design a fork lift which helps small scale industries in transporting the load in easy and cost efficient way. The idea was to lift and shift the materials on shop floor where very low frequency of shifting is required and the object being heavy enough for human to shift the materials. Where the lifting could be done by crank provided in a convenient approachable place near the operator seat and once the load is lifted by the fork, the vehicle could be propelled with operator itself by his pedaling effort just like a bicycle. The vehicle could be steered easily without any problem in the job floor as well as meant for flat floor.**

## I. INTRODUCTION

Now a days due to heavy work load environment in the mechanical industrial lines workers are been depressed for carrying a heavy load, where the workers are prone to unhealthy conditions. Due to these factors some load carrying machines were developed in the recent past years.

Working in the mechanical workshops or any other large fabrication unit, where load is to carry (bars, plates, machined jobs etc) from one unit of the factory to the other unit this device is useful. The In-plant goods carrier system is user friendly as designed. The device finds greater use in the industrial lines for transport of the machined

jobs, carrying goods internally in the fabrication plant.

The present In-plant goods carrier system is used for the industrial applications which can be moved from one place to other and hence the work such as carrying goods or any other is done within the time schedule and the production cycle time for that operation is saved, the handling, fixing and the other time wasted in carrying goods can be better utilized to carry out the production.

The device works on the simple mechanism of the motion transmission. It consists of mechanism where motion from hand wheel is transmitted to front wheels with the help of chain and the device moves further. There is hand wheel attached to the front wheel axle to rotate and turn.

The major problem of small scale industries related to cost of material handling is playing very crucial role in annual turnover i.e. Lifting of raw material, Lifting of finished goods, loading of part to machine and unloading from machine line. So cost regarding material handling is increasing in industries ultimately reducing net annual profit, so we want such a solution to above problem.

## II. METHODOLOGY

### 1. Working Principle

The mechanical fork lift machine consist of frame which is made up of steel square bars which are welded together to form a structure. Wheels are

attached for easy movement of the fork lift. The machine consists of a chain and paddle mechanism which is helpful in easy movement of the machine. The handle wheel and chain sprocket mechanism is used to give motion to the wheels and tri-pod steering is used to turn the wheels. The paddle wheel and rope and pulley mechanism is used for easy lifting of the material or to place the material or parts at the required place.

The mechanical fork lift is very much helpful in workshops for easy carry or placement of products. It is advantageous as it is purely mechanical which does not use any electric current, engine or any other source so it is more efficient. It requires any skilled or unskilled labor so use of mechanical fork lift reduces the labor cost.

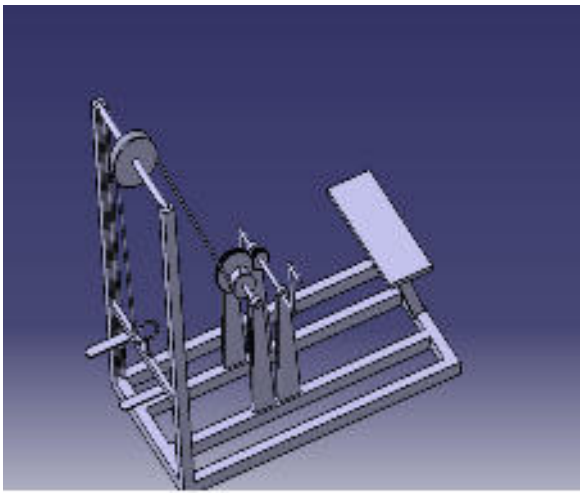

Fig. 1Schematic diagram of Fork Lift

2. Components of Fork Lift

i. Fork Frame

Fork frame is made of mild steel. Fork works as lifting member.

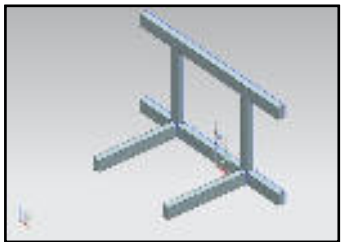

Fig. 2 3D Drawing of Frame

ii. Chain Drive

Chain drive helps to drive the system in both sides by using chain and sprocket mechanism. Two sprockets with diameter 180 mm and 40 no. of teeth and 90 mm and 20 no. of teeth are convenient. Bicycle chain is used to transmit the motion.

Fig. 3 3D Drawing of Sprocket

*iii.* Pulley

Rope and Pulley mechanism is used for lifting load. As no. of pulley increases effort required to lift the load are decreases. The pulleys are used to transmit power from one point to another by means of belts or ropes. Since the velocity ratio is the inverse ratio of the diameter of the driving and driven pulleys, therefore the pulley diameter should be carefully selected in order to have a desired velocity ratio. The pulley must be in perfect alignment in order to allow the rope to travel in a line normal to the pulley faces. In our model we use metal pulleys.

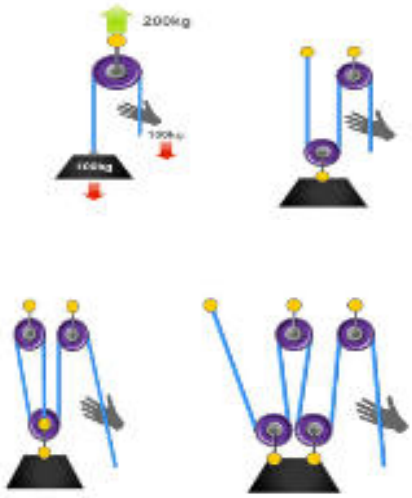

Fig. 4Pulley arrangement

*iv.* Bearing

SKF 6000 bearing is selected having ID 10 mm and OD 13 mm.

3. Design Calculations

The design of forklift is derived by trial and error method. The material selected to prepare the prototype model is mild steel due to its properties like malleability as it can be hammered and pressed into any shape, ductility as it can be bent easily and versatile and in the last is most common, cheap, strong and stiff.

A. Design for propulsion of vehicle

a) Design of sprocket

1) Torque available at hand wheel ($T_1$)

Normal human can apply force up to 100N by one hand'

Arm length is considered as 250 mm.

Torque = Force ×arm length

= 100 × 250

= 25000 N-mm

$T_1$=25 Nm

2) Torque required for moving forklift ($T_2$)

Total mass = mass of driver + mass of forklift + Load to be lifted

= 70+30+100

= 200 kg.

Total Weight = mass × gravitational acceleration

= 200 × 9.81

= 1962 N

Total weight is distributed over front and rear axles.

Weight on front axle = 1962 / 2

= 981 N

Weight on front axle is distributed between two wheels.

Weight on one front wheel = 981/2

= 490.5 N ……..Gravitational force'

We know that gravitational force is equal and opposite of normal force.

Normal force = 490.5 N

Frictional force = Coefficient of friction × Normal force

= μ × Fn

Coefficient of friction for rubber and concrete material is (0.6- 0.85)

We considered coefficient of friction equals to 0.75

Then,

Frictional force = 0.75 × 490.5

= 367.87 N

Now,

Torque = frictional force × radius of wheel.

We have selected standard wheel having diameter 10 inch.

Radius of wheel = 127 mm'

Torque = 367.87 × 127

= 46719.49 N.mm

$T_2$ = 46.71 Nm

Torque Ratio = Torque required to move fork lift / Torque available at hand wheel

=T2 /$T_1$

= 46.71 / 25

= 1.86~2

We know that, Torque is directly proportional to diameter and number of teeth on sprocket.

To eliminate the torque ratio we have selected standard driving sprocket having diameter 180 mm, 40 numbers of teeth and driven sprocket having diameter 90 mm, 20 numbers of teeth.

b) Chain calculations :

From V.B. Bhandari

Centre distance between axes of driving and driven shaft should be between 30p to 40p

So, we taken

Central distance = 35p

We are going to design forklift vehicle in such a way that,

- Vehicle should compact
- Centralize C.G.
- Minimize length of vehicle

So as per space availability we can keep central distance up to 600mm

Centre distance = 35p

600 = 35p

Pitch of chain (p) = 17.14

So we can choose standard chain having pitch = 19.05 mm
Roller Diameter = 11.91 mm ……...from table (V.B. Bhandari Page No. 547)
Width of chain = 12.57 mm
Transverse pitch = 22.78 mm

## III. FUTURE SCOPE

We feel the project that we have done has a good future scope in any engineering industry. The main constraint of this device is the high initial cost but has low operating costs. The machine designed should be based on the size.The device affords plenty of scope for modifications, further improvements & operational efficiency, which should make it commercially available & attractive. If taken up for commercial production and marketed properly, we are sure it will be accepted in the industry. It has plenty of scope if the device is made larger in size so that the capacity of carrying weight & the load is maintained properly.

## IV. CONCLUSION

Thus we conclude that this fork lift will be very useful for the small scale industry and this is economical with low cost and easy handling. It can be handle the irregular and uneven objects. The human power helps to handlethe work. The individual movement of the fork is to manage the irregular surface variation the lifting capacitates of the 150 kg. In the future work of the fork lifting is to adding the counter balancing back of the vehicle.

**References**

1. "Forklift Stability and Other Technical Safety Issues, J Lambert & Associates,"
2. "Design And Analysis Of Drive Shaft With Composite Materials,R.P.KumarRompicharla – PG Student, Dr. K. Rambabu – Associate Professor,"
3. "Fork-lift trucks – Hookon type fork Arms and fork arm carriages – Mounting dimensions"
4. "Material Handling Equipment Selection Using Weighted Utility Additive Theory, Prasad Karande and Shankar Chakraborty,"
5. "Design, Development and Modelling of Forklift, UgaleSachin S. , SalviTushar S., LanjekarSachin S. , KshirsagarPrashant R,"
6. "Human-Powered Forklift, Matthew sparkes,"
7. "Design and Structural Analysis of Mechanical Forklift using ANSYS Software, Prof.KshirsagarPrashant R,"

**M165**

# An Overview on Fluidized Bed Sand Cooler for Foundry Sand Reclamation

Rohitkumar S. Bharamgonda[1] Utkarsh A. Patil[2] Prof. P. N.Gore[3]
PG Student, Dept. of Mechanical Engineering, D.K.T.E Society's Textile and Engineering Institute, Ichalkaranji, Maharashtra, India. PG Student, Dept. of Mechanical Engineering, D.K.T.E Society's Textile and Engineering Institute, Ichalkaranji, Maharashtra, India. Asst. Professor, Dept. of Mechanical Engineering, D.K.T.E Society's Textile And Engineering Institute, Ichalkaranji, India.
bharamgondarohit@gmail.comutkarsh.patil546@gmail.compurushottamgore@yahoo.com

***Abstract*—This paper studies thermal and mechanical sandreclamation system and cooling unit. This work emphasizes the need of small foundry thermal sand reclamation process. This paper generates alternative ideas of cooler and conceptual design for heat exchanger used in foundry sand reclamation. A fluidised bed cooler is good alternative for foundry sand reclamation process.On the other hand, availability of new sand is becoming a problem these days. Local authorities are imposing restriction in mining extraction of sand altogether. Therefore supply of fresh sand to foundries shall be very little or it may even stop altogether. Therefore they will be compelled to survive on sand obtained by reclaiming used de-moulded sand.**

**So above problem work is to conceptual design fluidized bed cooler for 20 kg mould and core sand reclamation unit, including heat exchanger achieving minimum temperature 300 c, with suitable pressure development unit.**

**Keywords-** *foundry sand, Thermal reclamation, mechanical reclamation, coolers, fluidized bed, heat exchanger, indirect cooling etc.*

## INTRODUCTION

There are many small and medium scale foundries in India. After pouring mould sand and core sand gets wasted. The sand includes various types of binders like alkaline urethane, sodium silicate binders etc., which are hazardous to environment [11]. The waste sand is dumped in roads and grounds. The dumped sand, being toxic, would pollute the atmospheric air as well as the ground water having long lasting effect on environmental and plants [11]. Also small and medium scale foundries cannot afford to continue paying money to buy fresh sand. In this condition the development of a many more technologies for the reclamation of foundry sand. Reclamation is process in which sand is recondition without lowering its original properties, which are used for foundry application. Reclamation has main two types

ϑϑ. Thermal reclamation,
KK. Mechanical reclamation.

Under mechanical reclamation there are two sub types:

A] Dry mechanical reclamation
B] Wet mechanical reclamation.

Research work is related with thermal reclamation. In thermal reclamation process sand is heated up to $800^0$c in specially designed fluidized bed combustor. Because of heating binder are burnt and sand grain are separated. This $800^0$c sand becomes cooled in specially designed coolers. In cooling operation sand is cooled $800^0$c to atmosphere temperature. Coolingrequired forced fluidizing air as well as cross flow cooling coils. Thermal reclamation systems are including following units. Lump reducer, fluidized bed combustor, and fluidized bed cooler, dust extraction system.

Now-a-days varities of coolers are available for sand cooling in large scale plant. This machines which capacities like 1 to 5 Ton per hours. Fluidized bed capacity also changes with respect to system capacity. Small and medium scale foundries have not economical to reclamation sand for such large machine. The need to develop nw products within a short time, has given rise to new processes like rapid prototyping. There is a need of small capacity sand cooler in such case.

Today wide work is available for large capacity thermal reclamation system but it is difficult task to design, analysis and testing of small size, capacity foundry sand fluidized bed cooler. To overcome this problem it is required to design, analysis fluidized bed cooler system which may handle very small capacity of sand.

## B. STUDY OF SAND COOLING UNIT

Heat exchangers are devices whose primary function is the exchange of heat, typically from one fluid to another fluid. Heat exchanger is not only used in heating application but is also used in cooling application, such as refrigeration and air conditioners.

Many types of heat exchangers can be distinguished

A] Based on the direction the liquids flow

X. parallel-flow
Δ. Cross-flow
E. Countercurrent

In parallel-flow heat exchangers, both fluid moves in the same direction, entering and exiting of fluid same side. Parallel-flow heat exchangers have required more space. In cross-flow heat exchangers, the fluid paths run perpendicular to one another. Cross flow heat exchangers are compact. In countercurrent heat exchangers, the fluid paths flow in opposite directions, with each exiting where the other enters. Countercurrent heat exchangers tend to be more effective than other types of exchangers.

B] Another types of heat exchangers

- *Shell and Tube Heat Exchanger*

Shell and tube heat exchangers are made of multiple tubes through which liquid flows. The tubes are divided into two groups, the first group contains the liquid to be heated or cooled. The second group contains the liquid responsible for triggering the heat exchange.

Δ. *Plate Heat Exchanger*

Plate heat exchangers consist of thin and thick plates joined together, with a small amount of space between each plate. Gaps are maintained by a small rubber gasket. The surface areas are large, and the corners of each rectangular plate feature an opening through which fluid can flow between plates.Plate heat exchangers have such a large surface area, they are often more effective than shell and tube heat exchangers.

[12] *Regenerative Heat Exchanger*

In a regenerative heat exchanger, the fluid is passed along both sides of the exchanger, which can be either a plate heat exchanger or a shell and tube heat exchanger. Because the fluid can get very hot, the exiting fluid is used to heat the incoming fluid, maintaining a near constant temperature. A large amount of energy is saved in a heat exchanger because the process is cyclical.

- *Adiabatic Wheel Heat Exchanger*

In this type of heat exchanger, an intermediate fluid is used to store heat, which is then transferred to the opposite side of the exchanger unit. An adiabatic wheel consists of a large wheel with threads that rotate through the fluids both hot and cold to transfer heat.

## III. STUDY OF FLUIDIZED BED

Fluidized Beds are classified based on flow behavior is as follows:

- *Annular fluidized bed (AFB)*

In annular fluidized bed a large nozzle at the center of a bubble bed introduces gas as high velocity achieving the rapid mixing zone then found in the external loop of a CFB.

- *Vibratory fluidized beds*

Vibratory fluidized beds are similar to stationary beds, but add a mechanical vibration to further movement of the particles for particular work.

- *Circulating fluidized beds (CFB)*

In CFB, developed gases are re-circulated via an external loop back into the reactor bed.

- *Mechanically Fluidized Reactor (MFR)*

Mechanical stirrers are used for particle movement and achieve properties similar to that a well-mixed fluidized bed. It does not require fluidization any type of air or gas.

- *Bubbling fluidized bed*

Bubbling fluidized bed is the technique where the air or gas at low velocities is used and fluidization of the solids fine particles take place.

## IV. STUDY OF NOZZLES

Nozzles are used to transfer and circulation sand of sand. Nozzle pressure required is more when the inside area of structure is large and vice versa nozzle required less pressure when inside area of structure is small. Parameters of nozzles are depending on the sand physical properties such as throat diameter of nozzle is dependent on grain size, because it is possible to nozzle jam.The throat diameter is lesser than grain size.

## V. CONCEPTUAL CAD MODEL

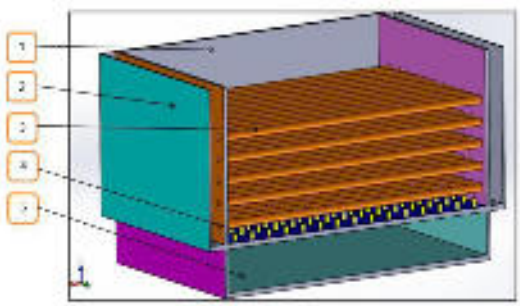

Figure 1: Conceptual model of fluidized bed cooler.
1. Structure 2. Water jacket 3.Cooling pipes 4.Nozzles 5.Air jacket

## VI. CONCLUSION

The above study mathematical design is not easy than theoretical concepts. Thermal reclamation processes used today have several limitations in the form of required space, cooling unit, suitable sand bubbling unit etc. this limitation need to eliminate, but present thermal foundry sand reclamation unit designed for particular work these are not capable to eliminate all problem. Due to this, there is requirement of specially arranged and designed portable fluidized bed cooler for foundry sand reclamation. By finding the range of sand heating detail design can possible.

## REFERENCES


[1] S. Bolotin, B. Vager, V.Vasilijev "Comparative analysis of the cross-flow indirect evaporative air coolers Sergey"International Journal of Heat and Mass Transfer, 88, 224-235. 2015

[2] A.Pécora and M.Parise "Heat Transfer Coefficient in a ShallowFluidized Bed Heat Exchanger with aContinuous Flow of Solid Particles"The State University of Campinas Faculty of Mechanical Engineering, 18,3-253. (2006)

[3] R. Singh, K. Ghule "Design, development, experimental and CFD analysis of a prototype fluidized bed stripper ash cooler"Applied Thermal Engineering, 107, 1077-1090. 2016
M.Joseph, F.Banganayi And D.Oyaombo"Moulding Sand Recycling And Reuse In Small Foundries" International Conference On Sustainable Materials Processing And Manufacturing,SMPM 2017,23-25 January 2017,Kruger National Park, procedia manufacturing ,7,86-91. 2017

[4] G. Lalagi, G.Adarsh, V.Vedavyasa, M. Rajagopal "Thermal Analysis And Flow Visualization In Vacuum Furnace Using CFD" International Journal Of Science Engineering And Technology, 4, 2348-4098. 2016

[5] J.Danko, R. Danko, M. Holtzer "Reclamation of used sand in foundry production" METALURGIJA, 42, 173-177. 2003

[6] R.Palkar and V. Shilapuram "Detailed parametric design methodology for hydrodynamics ofliquid–solid circulating fluidized bed using design of experiments" Chemical Engineering Department, National Institute of Technology, Warangal, 506004, Telangana, India.particuology, 10, 120-620.2016

[7] J. Lim, K. Bae, J. Shin, J. Kim, D. Lee, J. Han, D. Lee "Effect of particle–particle interaction on the bed pressure drop and bubble flow by computational particle-fluid dynamics simulation ofbubbling fluidized beds with shroud nozzle" School of Chemical Engineering, Sungkyunkwan University, 2066 Seobu-ro, Jangan, Suwon, Gyeonggi-do, 440-746, Republic of Korea.power technology , 288, 315-323. 2015

[8] F.Depypere, J.Pieters, K. Dewettinck "CFD analysis of air distribution in fluidised bed equipment" power technology, 145, 176-189. 2004

[9] P.sahoo and A.sahoo "CFD simulation for hydrodynamic behavior of fine particles in a fluidized bed" Indian Journal of Chemical Technology, 23, 253-261. 2

[10] P.sahoo and A.sahoo "CFD simulation for hydrodynamic behavior of fine particles in a fluidized bed" Indian Journal of Chemical Technology, 23, 253-261.

**M167**

# Experimental and finite element analysis of vibration characteristics of selected centrifugal pump.

Mr.Santosh S Kothale[1],Prof.Dr.V.R.Naik[2], Prof.G.S.Joshi3
[1]Research scholar, [2] Professor, [3] Assistant Professor
Department Mechanical of Engineering
D.K.T.E'S Textile and Engineering Institute, Ichalkaranji.

***Abstract*—A centrifugal pump consists of the rotating elements (e.g. pump impeller and shaft) and stationary elements (e.g. electrical motor and associated cooling fan, casing box and bearings). Vibrations of the working pump are generated by both mechanical and hydrodynamic sources. The mechanical sources are invariably generated by rotation of unbalanced masses and friction in the bearings. Hydrodynamic vibration is due to fluid flow perturbations and interaction of the rotor blades particularly with the volute tongue and guide vanes. The generated vibration will cause the pump surface to vibrate which will then act as a loudspeaker radiating airborne noise. Thus the basic mechanisms generating both structure borne vibration and airborne noise are the same.Harmonic Analysis performed to correlate Physical test results through FEA. Which will reduce the experimentation with different isolators and some finite quantity of isolator can be chosen for physical test. Different isolator models were tried in FEA from which 4 best isolator models were taken for physical testing.**

Keywords—*vibration, finite element analysis, harmonic analysis, isolators.*

## INTRODUCTION

Centrifugal pump plays an important role in industries and it requires continuous monitoring to increase the availability of the pump. The pumps are the key elements in food industry, waste water treatment plants, agriculture, oil and gas industry, paper and pulp industry, etc. [3]

It is expected that all pumps will vibrate due to response from excitation forces, such as residual rotor unbalance, turbulent liquid flow, pressure pulsations, cavitations and/or pump wear. The magnitude of the vibration will be amplified if the vibration frequency approaches the resonant frequency of a major pump, foundation and/or piping component. Generally higher vibration levels (amplitudes) are indicative of faults developing in mechanical equipment.

Sources of vibrations in centrifugal pumps

The sources of vibration in centrifugal pumps can be categorized into three types Mechanical causes, Hydraulic causes & Peripheral causes

Mechanical Causes of Vibrations

The mechanical causes of vibrations includes –

1. Unbalanced rotating components,
2. Damaged impellers and non concentric shaft sleeves
3. Bent or warped shaft
4. Pump and driver misalignment,
5. Pipe strain (either by design or as a result of thermal growth),
6. Inadequacy of foundations or poorly designed foundations
7. Thermal growth of various components, especially shafts,Rubbing partsWorn or loose bearings, Loose parts,Loosely held holding down bolts, Damaged parts.

Hydraulic Causes of Vibrations

The hydraulic causes of vibrations includes –

1. Operating pump at other than best efficiency point (BEP)
2. Vaporization of the product
3. Impeller vane running too close to the pump cutwater
4. Internal recirculation
5. Air entrapment into the system through vortexing etc.
6. Turbulence in the system (non laminar flow),
7. Water hammer.

## LITERATURE SURVEY

From the literature survey it can be seen that the Centrifugal pump has been topic of interest for many researchers. The research started from developing theories related to general behavior of Centrifugal pump and is now moving towards optimizing various Centrifugal pump parameters according to applications. Vibration analysis of centrifugal pump is carried out using various FEM software like ANSYS. The modal and harmonic analysis of centrifugal pump is carried out for study of vibration characteristics of centrifugal pump. RavindraBirajdar from kirloskarbrothers ltd mention various experimental techniques to carryout vibration analysis of centrifugal pump [1]. Amit suhane carryout experimental study work on a single stage diffuser type centrifugal pump [2]. They mentioned that optimal adjustments of radial clearance in pumps can solve the vibration and noise problem to greater extent. S. M. Abdel-Rahman mentioned four different case studies related to vibration problem are tested in the field and lab representing the common problems leading to failure and damage for some components of pumping stations [4].

A literature review motivated to find out various causes of vibration in our centrifugal pump. Literature review motivated to carryout study on study of effect of various isolators on vibration performance of pump.

## FINITE ELEMENT ANALYSIS OF CENTRIFUGAL PUMP

The commercial ANSYS package is used for the FE meshing, modeling and analysis module. The general structure of a Finite Element Analysis involves the following three steps

I. The description of the geometry, the physical characteristics and the mesh (pre-processing)

II. The application of finite element analysis. (solution)

III. The visualization and interpretation of the results of the solution. (post processing)

ANSYS Workbench offers various modules to carryout analysis. Following types of modules are used to carry out dissertation work.

1. Static structural
2. Modal analysis
3. Harmonic response analysis

The Figure shows solid model. Modelling of parts is carried out by using CATIA V5 R16 software. IGS model of parts is developed which is used for analysis. IGS model developed is imported in ANSYS for further study purpose.

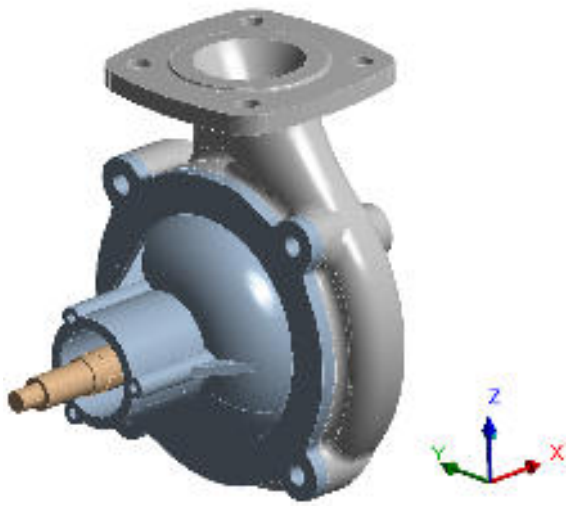


Fig-1. 3-D Model of Assembly of Pump

## MODAL ANALYSIS OF CENTRIFUGAL PUMP

Mode No-1

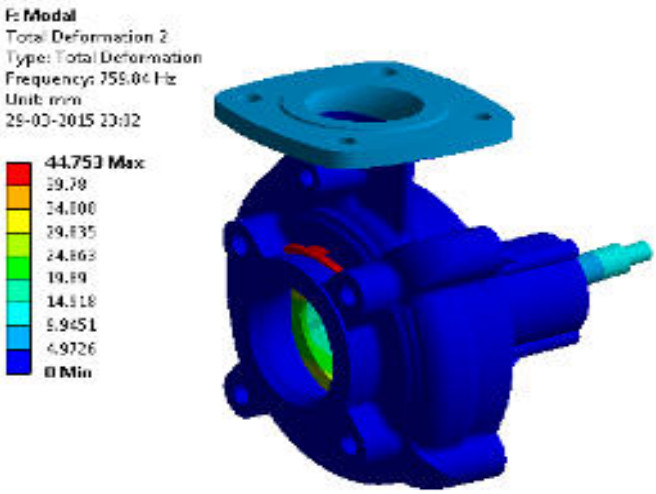


Fig 2. - Modal Analysis of Centrifugal pump assembly Mode No 1

Mode No-2

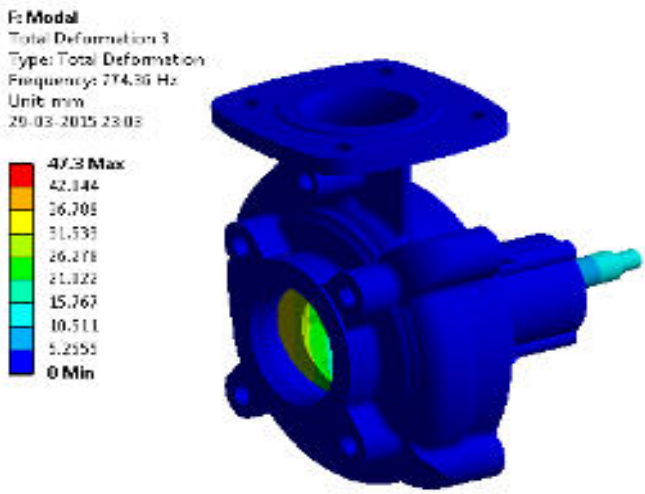

Fig 3 - Modal Analysis of Centrifugal pump assembly Mode No 2

Mode No-3

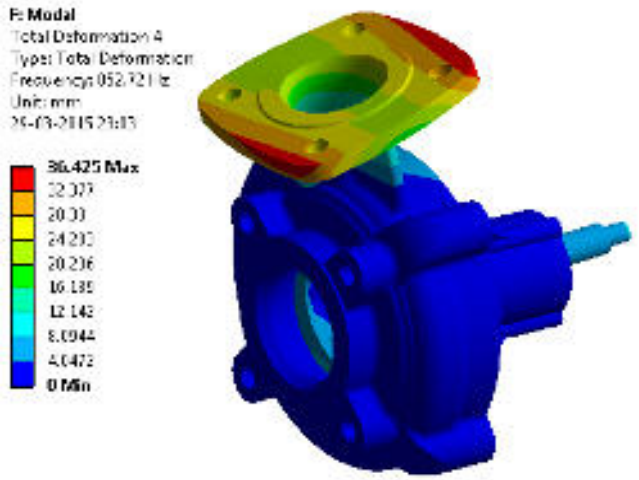


Fig 4 -Modal Analysis of Centrifugal pump assembly Mode No 3Mode No-4

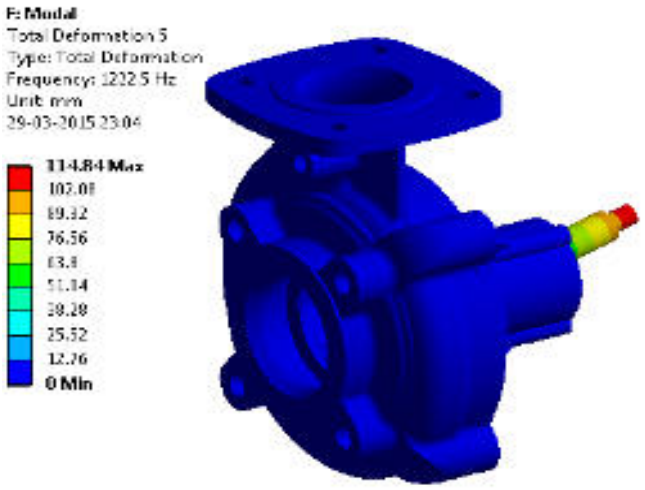


Fig 5 - Modal Analysis of Centrifugal pump assembly Mode No 4

Table below indicates first four mode shapes of centrifugal pump Assembly and respective frequencies.

| Sr. No. | Mode Shape | Frequency (Hz) |
|---|---|---|
| 1 | 1 | 759.84 |
| 2 | 2 | 774.36 |
| 3 | 3 | 852.72 |
| 4 | 4 | 1222.5 |

## EXPERIMENTATION

Experimentation is one of the scientific research method, perhaps the most recognizable; in a spectrum of methods that also includes description, comparison, and modeling. While all of these methods share in common a scientific approach, experimentation is unique in that it involves the conscious manipulation of certain aspects of a real system and the observation of the effects of that manipulation. Experimentation gives real insight of the system. In order to find out actual results experimentation is necessary because in theoretical analysis behavior of system parameters considered is linear but in actual those system behaves nonlinear in actual practices, so in order to find out difference in theoretical and experimental analysis experimentation is necessary.


Fig 6 --accelerometerFig 7- Four Channel FFT Analyzer

FEA Validation with Physical Testing:

Harmonic Analysis performed to correlate Physical test results through FEA. Which will reduce the experimentation with different isolators and some finite quantity of isolator can be chosen for physical test. Different isolator models were tried in FEA from which 4 best isolator models were taken for physical testing.

Below are correlation graphs for FEA and Physical Testing without Isolator.

Graphs shows better correlation of FEA results and Physical Test results considering the excitation frequency and amplitude of vibration.

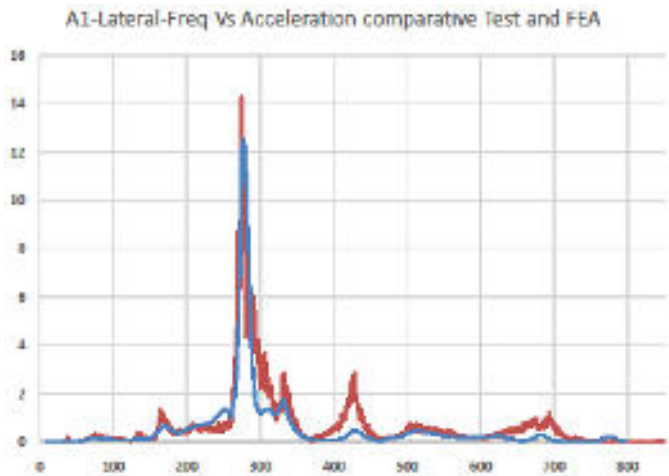


Fig 6.18- Graph showing Transverse Frequency Vs Acceleration Comparative Test and FEA In transverse direction.

Frequency Vs Acceleration Comparative Results in FEA & in Experimental

| Frequency | Acceleration FEA | Acceleration Experimental |
|---|---|---|

| | | |
|---|---|---|
| 175 | 0.18 | 0.14 |
| 277 | 14.1 | 12.5 |
| 325 | 2.4 | 2 |
| 425 | 2.4 | 0.4 |

**With Isolators:**

Isolator Dampers are used to minimize the vibration levels. Different types of isolators are chosen to get minimum vibration acceleration levels.

Circular type isolators are used with different shapes to investigate the required stiffness and optimum stiffness for mounting purpose. Different shapes of isolators such as Round (Circular)diameter 2.5", round isolator diameter 1.5", Circular with grooves, Tapered, were chosen for experiment.

Fig 10 -Tapered Isolator

Fig 11- Circular Isolator (1.5"Dia)

Fig 8- Circular Isolator (2.5"Dia)

Fig 9 - Grooved Isolator

## CONCLUSION

1) In order to isolate the vibration in centrifugal pump various types of isolators are studied. Circular with two different diameters, tapered and Grooved isolators are used for study.Investigation proves better results for Grooved Isolator; Vibration acceleration amplitude is reduced with grooved isolator compared with vibration acceleration results of pump without isolators.
2) Results of comparative Test in FEA and experimental analysis show nearby 10% variations in results.

## REFERENCES

[1] RavindraBirajdar, RajashriPatilKedarKhanzodeKirloskar Brothers Ltd., India "Vibration and noise in centrifugal pumps-sources and diagnosis methods" Paper Ref: S1163_P0437 3rd International Conference on Integrity, Reliability and Failure, Porto/Portugal, 20-24 July 2009, pages 1-12.

[2] Amit Suhane "Experimental Study on Centrifugal Pump to Determine the Effect of Radial Clearance on Pressure Pulsations, Vibrations and Noise" International Journal of Engineering Research and Applications (IJERA) ISSN: 2248-9622 www.ijera.com Vol. 2, Issue4, July-August 2012, pages 1823-1829.

[3] N.R. Sakthivel a, V. Sugumaran b, S. Babudevasenapati a, "vibration based fault diagnosis of monoblock centrifugal pump using decision tree"expert systems with applications 37(2010),pages 4040-4049.

[4]. A.A. Nasser, M.A.Nasser, E.H.T. El-Shirbeeny, and S.M.Abdel-Rahman "Modal analysis of a centrifugal pump" undergoing research for ph.D research titled "Dynamic Analysis and Control of lrrigation and Drainage Pumping System in Egypt, Faculty of Engineering, Shebin El-Kom, Menoufia University, Egypt, pages 550-557.

[5]. A Syam Prasad, BVVV Lakshmipathi Rao, A Babji, Dr P Kumar Babu, "Static and dynamic analysis of a centrifugal pump impeller", International Journal of Scientific & Engineering Research, Volume 4, Issue 10, October-2013.

[6]. KarthikMatta, KodeSrividya, InturiPrakash, "Static and Dynamic Response of an Impeller at Varying Effects", IOSR Journal of Mechanical and Civil Engineering (IOSR-JMCE), (Vol. 11, Issue 1, Jan. 2014), pp. 101-106.

[7]Nitin.S.Gokhale,Sanjay.S.Deshpande"Practical Finite Element Analysis",Finite to Infinite,India. First edition.pp 1-376.

[8]Ramana Podugu, J.Suresh Kumar, B.V.Ramana murthy, N.Syam Kumar,"A modal approach for vibration analysis and condition monitoring of a centrifugal pump", International Journal of Engineering Science and Technology (IJEST).

**M169**

# Review of Multi-stage Strain gauge based load cell

Shreyas Pandit
*PG student, Department of Mechanical Engineering, Textile and Engineering Institute, Ichalkaranji, India*

Prof. Vijay Kamble
*Assistant Professor, Department of Mechanical Engineering, Textile and Engineering Institute, Ichalkaranji, India*

**Abstract—A load cell is a transducer which converts force of the application being used, into a measurable electrical output. Although there are many varieties of load cells, strain gage based load cells are the most commonly used type. Strain gauge based load cell consist of arrangement on load cell in such a manner so that it can give optimal sensitive output. Typically, a load cell consists of four strain gauges in a Wheatstone bridge configuration, while one strain gauge (quarter Bridge) or two strain gauges (half bridge) are also available. Traditionally used linear load cell have problem of limited resolution, and using multiple load cells in one device is bulky and expensive. The paper presents, review of types of load cells and new techniques used in designing and optimizing it, also information is given on Multi-capacity and Non-linear load cells.**

Keywords—*Strain gauge, load cell, transducer, types, optimizing.*

## I. Introduction

The sensing element is the main structural component of the load cell. The element is designed in such a way that it develops a strain, directly proportional to the load applied for providing result. The load cell takes many are been known for variety of uses throughout research and industrial applications.The majority of today's designs use strain gauges as thesensing element, whether foil or semiconductor in some or other configuration. Sensing elements (strain gauges) are normally made of high strength alloy steels (nickel plated for environmental protection), precipitation — heat treated aluminum alloys, hardened stainless steels, or beryllium copper alloys. By bonding strain gages to a precisely machined element, the force applied can be identified in terms of resistance change which provides output in terms of voltage. The strain gages forms many configurations,of which usually four or a multiple of four, are connected to form Wheatstone bridge configuration that convert very small change in resistance into a usable electrical signal. Passive components such as resistors and temperature depending wires are used to compensate and calibrate the bridge output signal.

Most common types of strain gauge based load cell are:[1]

- Bending load cells
- Shear beam load cells
- Compression-Tension load cells
- Ring torsion load cells

Some new types include:

- Miniature load cells:
  Miniature load cells because of their compact size usually use semiconductor strain gauges as the sensing element.
- Specialty Automotive/Auto sport Load Cells
  Seat belt load cell, Steering wheel load cell, Pedal force load cell, In-line suspension load cell.
- Multiple Axis Load cells

The following are only some of the applications of load cells but not limited to:

- In automotive industry for component test rigs andcrash tests.
- In aerospace industry for air frame test rigs, landinggear test rigs, aircraft weighting and the torsion tests.
- In Research and development activities for universal testingmachines, (tension, compression and torsion ) formeasuring the load in obtaining the autographic records,(loaddeflection curves),

- In Civil engineering field for bridge lifting, structural testing.[2]

## II. DESIGN CONSIDERATIONS FOR LOAD CELLS

There are several challenges to designing a load cell. One wants to reduce the load cell mass and volume to minimize its effect on the test sample.
Some of important considerations that must be taken into account are as follows: [3-4]

- Loading direction
- Loading nature (static or dynamic)
- Non-linearity
- Characteristics of elastic element
- Size and Capacity

### A. Loading direction

Determine the way that the load cell is to be loadedi.e. in tension, compression or tension and compression. Load cells generally are designed for measurement in either tension or compression but some universal load cells are designed for measurement in both directions. Load cells work in compression modes are simpler in design than others.

### B. Loading nature (static or dynamic)

Loading speed and how fast the reading is (1 Hz, 10 Hz, 100 Hz or faster) are the main factors in determining the loading nature either static or dynamic. The design of load cells differs according to the required response. The response time of a load cell is generally of the order of 3-5 milliseconds. Loading nature also determines the type of required output; Analog or Digital. The most common output available from conventional load cells is mV/V.

### C. Characteristics of elastic element

The shape of the elastic element on which the strain gages are bonded depends on a number of factors including the range of force to be measured, dimensional limits, and final performance and production costs. The force carrying member may be a column or tension bar of circular, square or octagonal cross section and may be either solid or hollow. The member can also be of ring or other form designed to produce a simultaneous measurement by the gauges. The material used for the elastic element is usually a material which exhibits a linear relationship between the stress (force applied) and strain (output) with low hysteresis and low creep in the working range. There also has to be high level of repeatability between force cycles to ensure that the load cell is a reliable measuring device. To achieve these characteristics it is usual to subject the material to a special heat treatment. The geometric shape and modulus of elasticity of the elastic element determine the magnitude of the strain field produced by the action of the force. Building a multi capacity load cell require using different elastic element for each range.

### D. Size and Capacity

Dimensions are the controlling consideration in applications. Comfort of users, ease of use, safe handling and monitoring conditions to prevent harmful faults are to be considered when designing load cells. A special attention should be paid to the loading mounting accessories of load cells on the top as well as bottom for compression and tension modes. The main purpose of these mounting accessories is to ensure axial, accurate and safe loading conditions.

### E. Non-linearity

The nonlinearity of a force transducer can be attributed to three distinct effects: material, geometric, and Wheatstone bridge nonlinearities. Material non- linearity is due to a nonlinear constitutive law which implies the stresses are not linearly proportional to strains. Geometric nonlinearity arises from both non- linear strain-displacement relations and finite changes in structure geometry. [5] Nonlinearity due to the Wheat- stone bridge is related to the specific changes in resistance of a strain gage. Since the material used to construct force transducers has a yield point that is four to five times greater than working stresses, linear material models can be used without introducing significant solution errors.

## III. New methods of designing load cell

Although traditional linear load cells show good performance for specific application there are some new designs which are also been proven effective in many ways. Some of them are:

- Multi stage/range load cells
- Non-linear load cells
- Multi-capacity load cells.

### A. Multi stage/range load cells

A novel G-shaped load cell formeasurement of two ranges of weight loading. In the first range of light weight loading),there was no contact between the two special components of the load cell. In the secondrange of heavy weight loading, contact between the two components occurs.[6]

Main advantage of this type of load cell is that it helps in easy distinguishing light load and heavy load and also has simple design.[7]

Optimization of this load cell could be carried in order to maximize the sensitivity and at the same time limiting the mass of load cell.

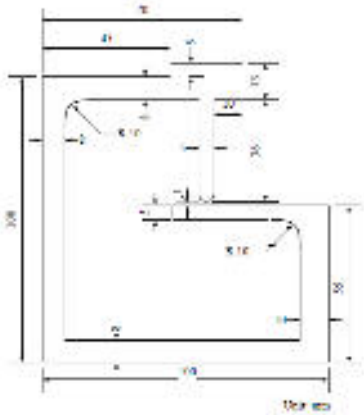

FigI. G- shaped load cell

B. Non-linear load cell

Nonlinear stiffening load cell with high-resolution (within 1% of the force value) that can function over large range (5 orders of magnitude), with minimal hysteresis and intrinsic geometric protection from force overload. The stiffening nature of the load cell causes its deflection and strain to be very sensitive to small forces and less sensitive to large forces. [8] When used with a constant-resolution sensor, this causes the load cell as a whole to have higher resolution for smaller forces. High stiffness at high forces prevents the load cell from over-straining.

A physically implemented nonlinear flexure as a ring that increasinglycontacts rigid surfaces with carefully chosen curvaturesas more force is applied.

Non-linear load cells also can be manufactured in form of monolithic or multiple parts.[9]

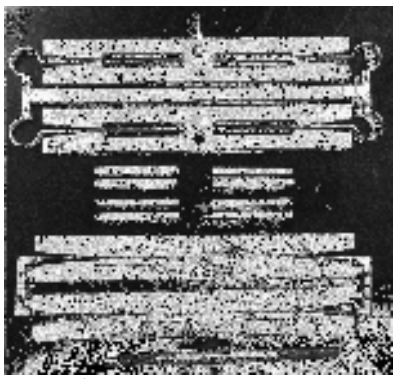

Fig II. Non-linear load cell

C. Multi capacity load cells

The different-capacities load cell was introduced based on increasing the stiffness (k) for each range, increasing the stiffness require using harder elastic element.

Manufacturing a load cell with three different capacities requires the ability to offer three values of stiffness, one for each capacity. [10] Simply for the load cell first capacity an elastic element nominated for the working range is loaded. For the second capacity a new introduced element is loaded instantaneously with the first element to withstand the load together For the third capacity a anther new introduced element is loaded instantaneously with the first and the second elements to withstand the load together.

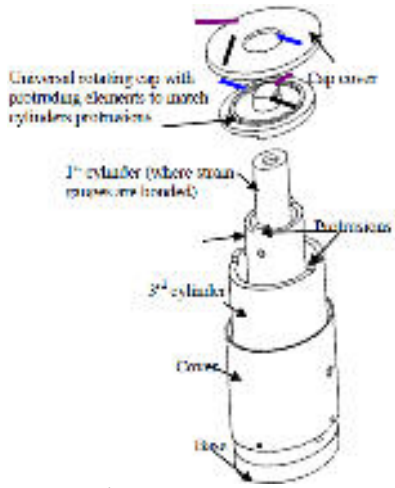

FigIII. Multi-capacity load cell

## IV. OPTIMIZATION METHODS

A. Shape optimization using FEA tools

Most commonly, shape optimization is the process of changing the physical dimensions of a structural part to reduce weight while staying within design constraints, usually maximum stress or deflection. Shape optimization can include, but is not limited to optimizing items such as fillet radius, hole diameter and width or height of a part. Usually, shape optimization is performed on solid models, although there are many applications for surface models (shells).Shape optimization links finite element analysis and parametric geometric construction to make it possible to explore different design options.[11] It involves varying certain design parameters (e.g. dimensions) while observing other criteria (e.g. maximum allowable stress) until the best and most economical design is found. While finite element analysis is primarily a tool used to verify a design, it can also be the first step toward improving a design. A first-pass finite element analysis might show that stresses and other design responses are well below a prescribed limit, which indicates that it is safe to make some design changes.

B. DoE optimization using Taguchi method with GRA technique

Taguchi method, recommends the use of the loss function to measure the performance characteristics that are deviating from the desired target value. The value of this loss function is further transformed into signal-to-noise (S/N) ratio.Taguchi method is used for optimizations of parameters usingsignal to noise ratio usually, there are three categories of the performance characteristics to analyze the S/N ratio. They are: nominal-the-best, larger-the-better, and smaller-the-better.[12-13] It can optimize the single response onlyand unable to optimize if the number of responses are more thanone . In many cases, parameters cannot be set only for oneresponse, as the objective would be to minimize and maximizesome response.

## V. CONCLUSION

This research paper aims for giving general overview of load cells that are being used and also new techniques used in designing load cells:

1. Different types of load cells are used according to application also considerations essential for designing load cell are presented.
2. New methods of designing load cell as multi staging, Non linear and multi capacity load cells have found useful in some particular applications.
3. Multi objective optimization using Taguchi method with GRA technique can be implemented when there is need to minimize certain variable and at the same time maximize another one.

## ACKNOWLEDGMENT

The authors are grateful to the my project guide Prof. V.A.Kamble , Department of Mechanical Engineering, for providing unreserved guidance, inspiring discussions and constant supervision throughout this research work.

## REFERENCES

[1] The information centre for sensors and data system. http://www.sensorland.com/HowPage005.html.

[2] Ahmad Qandil., Adnan I. O. Zaid., “Considerations in the Design and Manufacturing of load cell for Measuring Dynamic Compressive load”, IEEE publications ,2015.

[3] How to select a load cell, [online] Available: http://www.lcmsystems.ro/res/How%20to%20select%20a%20load%20cell%20(English).pdf.

[4] Seif. M. Osman., Ebtisam H. Hasan., H. M. El-Hakeem., R.M.Rashad and F. Kouta.,“Conceptual design of multi-capacity load cell”,16th International Congress of Metrology, page 2-3.

[5] Joseph H.Antkowiat., Joseph J. Rencis., “Geometric nonlinearities in design of forcetransducers”,Advances in Engineering Software Elesvier publications pp 12-15.

[6] Yen-Shuo CHANG., Tshen-Chan LIN., “An Optimal G-shaped Load Cell for Two range Loading”, Asian Agricultural and Biological Engineering Association, EAEF 6(4) : page 172-176.

[7] Fan-She Lin., Tshen-Chan Lin., “Design of a G-shaped load cell for two range weighing application”, International Agricultural Engineering Journal pp 80-84.

[8] Jocelyn M. Kluger., Themistoklis P. Sapsis., Alexander H. Slocum., “A high-resolution and large force-range load cell by means of nonlinear cantilever beams”, Elsevier publications,Precision Engineering 43 (2016) ,241-256.

[9] Jocelyn M. Kluger.,Themistoklis P. Sapsis., Alexander H. Slocum., “Ring-based stiffening flexure applied as a loadcell with high resolution and large force range”, MIT press journals.

[10] Seif. M. Osman., R.Kumme.,H. M. El-Hakeem., F. Löffler., Ebtisam H. Hasan.,R.M.Rashad., F. Kouta., “Force Transducer With Different Capacities” ,XXI IMEKO World Congress “Measurement in Research and Industry”August 30 - September 4, 2015, Prague, Czech Republic.

[11] Mr. S. M. Ghanvat., Prof. H. G. Patil., “Shape Optimization of ‘S’ Type Load Cell Using FiniteElement Method” International Journal of Engineering Innovation & Research, Volume 1, Issue 3, 310-315.

[12] Rakesh Kolhapure., VasudevShinde., Vijay Kamble., “Geometrical optimization of strain gauge force transducer using GRA method”, Elsevier publications, Measurement 101 (2017),111-117.

[13] M. Durairaj., D. Sudharsun., N. Swamynathan., “Analysis of Process Parameters in Wire EDM with Stainless Steel using Single Objective Taguchi Method

and Multi Objective Grey Relational Grade", Elsevier publications, International Conference On DESIGN AND MANUFACTURING, IConD 2013, page 869-875.

**M170**

# Solar Combo Cleaner

[1]Komal Vilas Gore, [2]Koyal sagar suryavanshi, [3]Vidya Mahadev Kamble [4]Komal Manik Sargar [5]Sayali Anil Patil.
1,2,3,4,5 Students, Mechanical Engineering Department, D.K.T.E. Society of Textile Engineering, Ichalkaranji , Maharashtra

**Abstract**
**Solar energy technologies are excepted to contribute substantially towards meeting rapidly increasing global energy demand with minimum environmental emission.**
**Industrial report says the lack of scheduled cleanings cause solar panel to loose 15-25% of their efficiency & increase a solar cell paid back time by 3 or 5 years.**
**After realizing a good cleaning is called for the next step is to choose a product that will not only be safe for solar panels or sunlight but will also be safe for the building, the ecology & our families & employees.After regular intervals we can clean the solar panels. But now a days, in busy schedule the person not getting the to clean at regular interval. That's why we are developing a "solar combo cleaner" to clean solar panels automatically after 7 days. By using microcontroller we have set (feed) the program in SCC.**
Keywords:- *solar panel, cleaner etc.*

## Introduction

The 21st century the world has seen mechanization in almost every walk of life. In modern era all things are done by machines our endeavor was to minimize was to minimize the human efforts.

Thus in the proposed project we have taken care of various factors that would minimize the human efforts in positive manner. In the present technological age most of the work is done by machines and devices.

Aim:- to reduce the cost , labour and human efforts to clean glass and solar panel.
Today's difficulties :- the arrangement (placement ) of solar panel and glass windows are fixed on light and narrow space many time risk involve of all down breakages and scratches on glass .
This machine is capable to work without aid of electric supply or human power. It reduces the labour problems and safety from accident moreover the cost of machine will be less.
According to Indian culture we need everything in cheaply then they buy it. So, our first aim is to manufacture small and compactable machine of low cost and good quality.

## Construction and working :-

It is clear from above fig. it shows from bottom side. It consists of various parts like battery, motor solar panel, brushes,

sprinkler.

This machine consists of PMDC motor. The controlling of DC motor is easy than AC so we choose this. We use 3 motors to rotate the brush for cleaning purpose & to rotate the wheel forward according to the application of the speed of motors.

- For brush – 150 rpm
- For wheel – 100rpm
- Battery – lithium polymer battery. 9 volt , 1500 Ma
- Cells – 18
- Motor specifications – PMDC BO2 type, 100 rpm, Dia. 50 mm.
- We use the nylon for cleaning the surfaces. Nylon brushes are used because they are smooth & cleans 99% of dust & life of this brushes is more as compared to other brushes.
- Another part is vaccum cup, it is used to adhere on vertical as well as on H2 (plane) surfaces. It creates vaccum so, it firmly attached to the surface hence perfect grip achieved.
- We use sprinkler for water spray to clean surfaces better it requires to provide external supply of water.
- The gears are used to transmit the power .we use crown, spur, worm, bevel .
- Bevel gear is used to drive the brush.

❖ **Electrical connections:**

- **Switch connection :**
  DPDT switch has positive connection & negative connection connected across to each other of 2 switches. Middle ports connected to each of 60$^{th}$ switches. So in this one positive connection is given to positive terminals wire of a battery. And negative is given to negative terminals wire.
- **Battery connection :**
  The switch has 3 sided ports it keep in middle part when the working is stopped the positive terminals of these switch is attached to other part and negative is connected to main upper side battery terminal & one is given to positive terminal.
- **Solar panels connection :**

  The 9 panels used they are connected to each other & each 3 panels connections is given to battery positive and negative side of solar terminals respectively & is connected with the use of ZENER DIODS.
- ZENER DIODE:
  It is always allows current to flow from its anode to cathode. But does not allow reverse flow of current. i.e. positive side wire of panel is connected to cathode side. So it allows to pass current only, it is in sufficient amount to battery then it gains back. But on negative side is connected to anode side so only one

side flow can be allowed & other side flow is blocked.

- **Motor connection :**
  One positive terminals is given to the brush sided switch & another negative terminal connected to main battery negative terminal connections. Also main motor connections positive & negative are attached to switch terminals. And by this way connections are done.
  This machine is works on the solar power energy which is eco-friendly & which is renewable source. By using solar energy we charge the battery. battery is to run the brushes and motor using an electrical circuit.

- **Steps:**
  When we push the button to left side then charging start from solar panels to battery.
  When we push the button to right the machine starts.
  By using remote operate the machine.
  We move forward or reverse or rotations can be done. Third switch is for operation of brush.
  For cleaning the vertical surfaces the vaccum cups perform main function that they create vaccum and perfectly adhere to the surface. And our aim is achieved.

- **Design:-**

**Gear calculation**

$Pc = \pi d/T$
$1.5 = \pi d/7$
$d = 3.34mm$
diametral pitch,
$Pd = T/d$
$= 7/3.34$
$= 2.094$
Module,
$M = d/T$
$= 3.34/7$
$= 0.47$
Recommended series of modules in Indian standard we select
$M = 1$
Addendum = 1/Pd
= 1/2.094
= 0.4775
Dedendum = 1.5/ Pd
= 1.5/2.094
= 0.5525
Working depth = 2/ Pd
= 2/ 2.094
= 0.9551
Clearance = 0.157 * Pd
= 0.157 * 2.094
= 0.0749.

- **Advantages :-**
- Problem solver: can be used in difficult or impossible areas.
- Work efficiently thanks to high cleaning capacity, multiples faster than by hand.
- Fully automated deployment possible, no operator required.
- Increased job safety, since manual steps are no longer necessary.
- The operator simply controls the robot, or relies on fully automated operations.
- Absolutely discreet cleaning for residential buildings or hotels.
- Easy control over radio control using a joystick, or fully automated operation.

- **Disadvantages :-**
- Speed limitation.
- Size is limited.
- System is noisy.
- Life of battery is less.

- After use some parts need to be thoroughly cleaned to ensure blockage.

❖ **Applications:-**

- For cleaning of inclined surface by means of hanging.
- For cleaning of vertical surfaces, It houses, molls, hotels etc.
- For cleaning of glass windows.
- Water wash is possible for cleaning of any surface.

❖ **Future scope :-**

Following are the areas;

- we can make it more sensitive than this.
- We can use LDR i.e. light dependent resistance. It activates in dark and cleans efficiently.
- We can do this system automatically without use of remote control.

❖ **conclusion :-**

The evolution of human was depend on his need . The same thing happen with us in every way .we shared my thought with my friends. We have used one of wide brush which having smooth hair or like a sponge than we thought if that brush moves up and down.

Then if we use water and detergent along with this more over we thought all this work will happen with using small motor by using lead acid battery and that battery will work on photo voltaic cell, where solar energy is used. Also, due to dust particles 35% efficiency of solar panels decreases. This machine overcomes this difficulty by cleaning effectively.

❖ **Reference**

1. KING, R.R, et., Appl.phys. Letters ,90920070
2. “Improving the efficiency of solar panels”.The hindu 24 octomber 2013 Retrived 2015-09-29
3. “Micro Inventors for Residential solar Arrays”. Retrived 2015-09-29

**M172**

# A Case Study on Improvement of Agility and Sustainability for a Manufacturing Organisation

Prof Gopinath H.Rathod
Dept of Mechanical Engineering
Basaveshwar Engineering College
Bagalkot, India
gopinath.rathod@gmail.com

Mr Vilas Rathod
Dept of Mechanical Engineering
Basaveshwar Engineering College
Bagalkot, India
krvilas@gmail.com

***Abstract*—Increasing competition has been forcing themodern manufacturing organisations to adopt advanced manufacturing paradigms. Agile Manufacturing (AM) is an advanced manufacturing paradigm that enables an organisation to survive in the competitive business environment. Agility is the performance measure of AM practices. Simultaneously, modern business organisations are forced to evolve environmental friendly products. Sustainability is regarded as an important concept for survival by the modern organisations. In this context, agility and sustainability are regarded as performance measures for contemporary organisations. This paper reports a case study in which the case study has been carried out in an Indian rotary switches manufacturing organisation. The candidate product is the knob of rotary switch. Initially Computer Aided Design (CAD) has been used to digitalise the baseline model. Keeping the baseline model as reference, five new knob models have been evolved. Then the sustainability analysis has been carried out to determine the environmental impact of the knob models. The analysis results indicated that the evolved knob models possess minimal environmental impact. The conduct of case study has lead to an inference that there is a significant improvement of agility and sustainability in the design and development of knob of rotary switch.**

*Keywords—Agile Manufacturing; Sustainable Engineering; Computer Aided Design; Environmental product design.*

## INTRODUCTION

The increasing product complexity and market dynamism has forced the emergence of Agile Manufacturing (AM) era AM enables an organisation to survive in the competitive environment of continuous and unanticipated changes to respond quickly to customers' dynamic demands [2]. The contemporary design engineers needs approaches for creating environmental friendly products. Environmental friendly design is a comprehensive, holistic approach for creating products and systems that are environmentally benign, socially equitable and economically viable [4]. In the contemporary manufacturing scenario, agility need to be coupled with sustainability. In this context, this case study has been carried out in Indian rotary switches manufacturing organisation. The Computer Aided Design (CAD) model of existing knob of a rotary switch has been made. Keeping the baseline model as reference, five different knob models have been created. After the creation of CAD models, the sustainability analysis has been conducted to determine environmental impact in terms if carbon footprint, energy consumption etc.

## LITERATURE REVIEW

The literature has been reviewed from the perspectives of agility and sustainability. AM research has been initiated in the year 1991 at Iaocca institute Lehigh University, United States of America when a group of researchers have instituted Agility Forum. Thereafter researchers have started working on AM [5]. Sarkis [6] has enunciated that AM is the combination of principles of lean manufacturing and flexible manufacturing systems (FMS). Gungor and Gupta [8] have presented Environmentally Conscious Manufacturing and Product Recovery integrating environmental thinking into new product development including design, material selection, manufacturing processes and delivery of the product to the consumers, plus the end-of-life management of the product after its useful life. Kaebernick et al. [9] have presented the integration of environmental requirements throughout the entire lifetime of a product

## CASE STUDY

This section presents the details of the CAD modeling and sustainability analysis of knob models.

### *A. CAD modelling of baseline and proposed models*

The CAD model of baseline knob is shown in Figure I. The CAD model has been developed using Pro/Engineer software package.

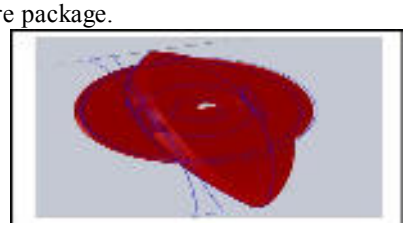

**Figure I** CAD model of baseline knob model

Keeping the baseline model as reference, new models of knob has been derived. The new models are shown in Figure II-V. The new models have been designed in discussion with the executives of case company and also by gathering customer preferences.

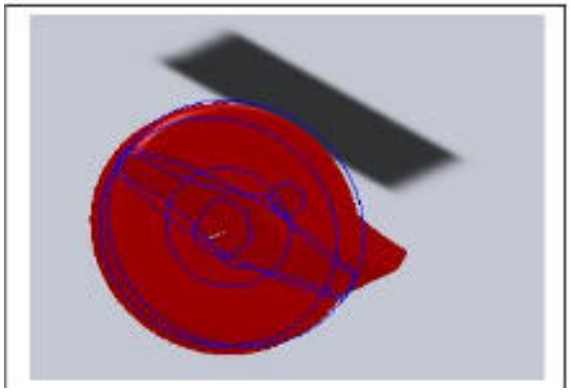

**Figure II** CAD model of proposed model D1

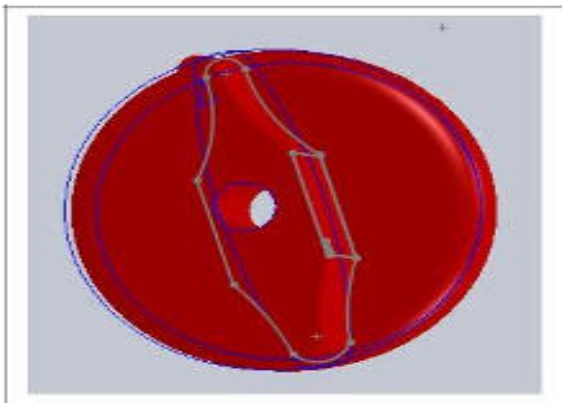

**Figure III** CAD model of proposed model D2

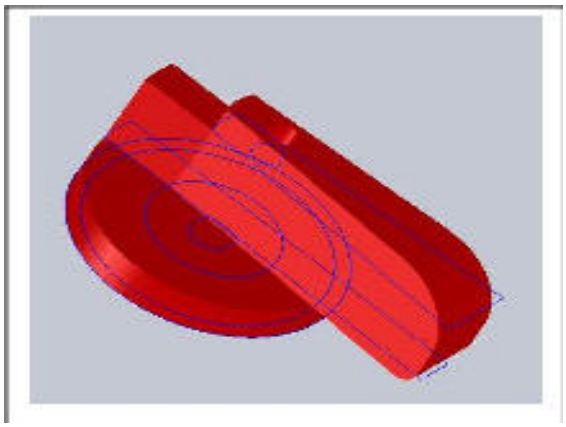

**Figure IV** CAD model of proposed model D3

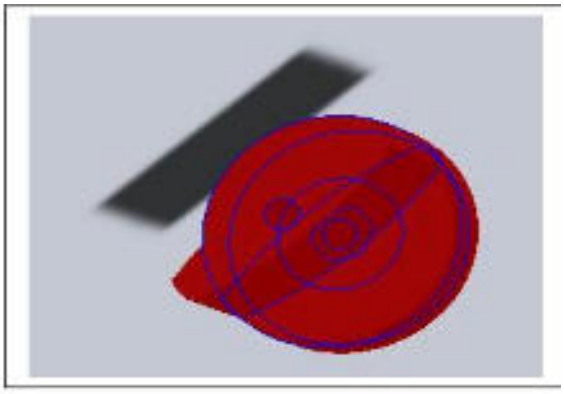

**Figure 5** CAD model of proposed model D4

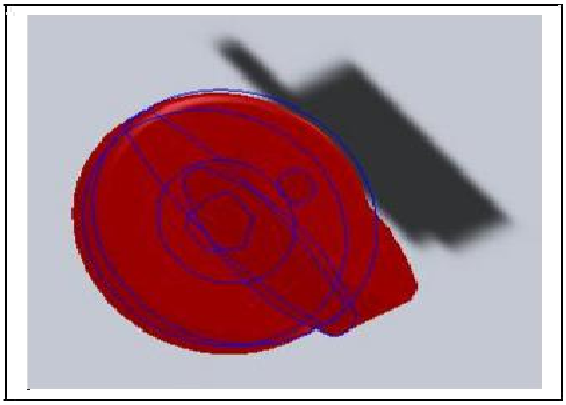

**Figure V** CAD model of proposed model D5

*B. Sustainability analysis*

After The sustainability analysis has been carried out using Sustainability Xpress software package. The environmental impact has been measured in terms of carbon footprint, air acidification, total energy consumed and water eutrophication. Air Acidification represents the sulphur dioxide, nitrous oxides other acidic emissions to air cause an increase in the acidity of rainwater, which in turn acidifies lakes and soil.
This impact is typically measured in units of either kg sulphur dioxide equivalent (SO2e), or moles H+ equivalent. Carbon footprint represents Carbon-dioxide and other gases which result from the burning of fossil fuels accumulate in the atmosphere which in turn increases the earth's average temperature. Global warming is the reason for problems like loss of glaciers, extinction of species, and more extreme weather, among others. Total Energy Consumed is a measure of the non-renewable energy sources associated with the part's lifecycle in units of megajoules (MJ). This impact includes not only the electricity or fuels used during the product's lifecycle, but also the upstream energy required to obtain and process these fuels, and the embodied energy of materials which would be released if burned. Water eutrophication represents over abundance of nutrients are added to a water ecosystem, eutrophication occurs. This impact is typically

measured in either kg phosphate equivalent (PO4e) or kg nitrogen (N) equivalent.

The sustainability analysis for the baseline as well as the proposed designs has been conducted. The results of the sustainability analysis for the baseline design have been shown in Figure VI. As a sample, the results of the sustainability analysis for the proposed design (D1) have been shown in Figure VII. Similarly, the sustainability analysis has been carried out for the remaining proposed models. The results of the sustainability analysis indicated that the proposed models possess minimal environmental impact.

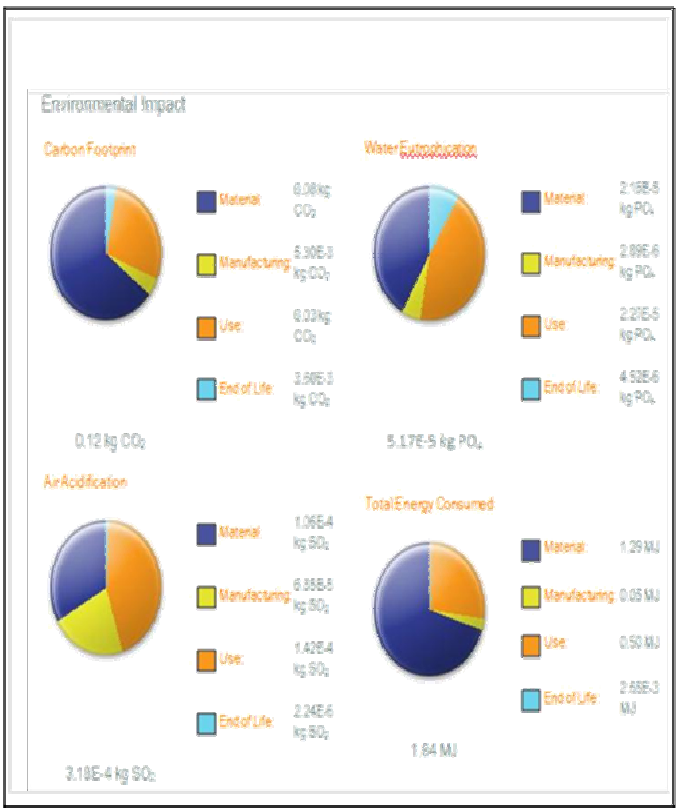


**Figure VI** Results of sustainability analysis of baselinemodel

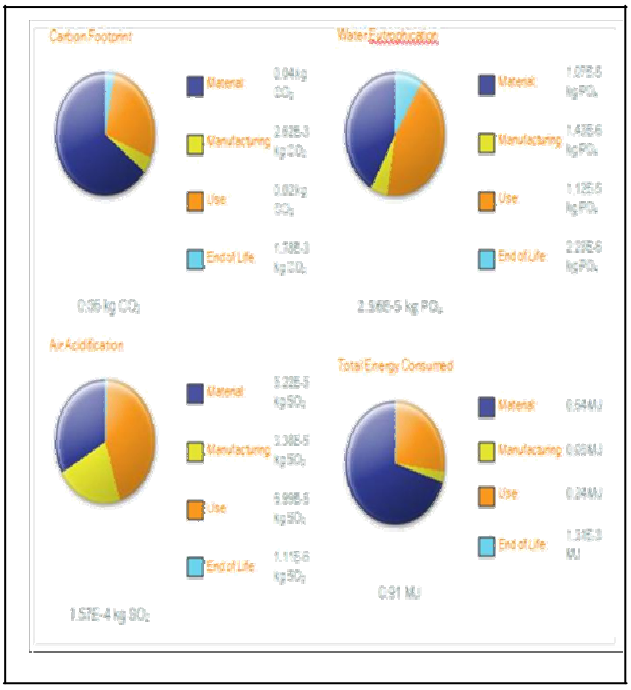


**Figure VII** Results of sustainability analysis of proposedmodel D1

## IV. RESULTS AND DISCUSSIONS

TABLE I. COMPARISON OF THE RESULTS OF SUSTAINABILITY ANALYSIS OF BASELINE AND PROPOSED MODELS

| Papers | Baseline model | Proposed Model 1 | Proposed Model 2 | Proposed Model 3 | Proposed Model 4 | Proposed Model 5 |
|---|---|---|---|---|---|---|
| Carbon footprint | 0.12 | 0.06 | 0.05 | 0.1 | 0.07 | 0.06 |
| Water Eutrophication | 5.17E-05 | 2.56E-05 | 2.17E-05 | 4.08E-05 | 2.95E-05 | 2.69E-05 |
| Air acidification | 3.18E-04 | 1.57E-04 | 1.33E-04 | 2.51E-04 | 1.81E-04 | 1.65E-04 |
| Total energy consumed | 1.84 | 0.91 | 0.77 | 1.45 | 1.05 | 0.95 |

The results of the sustainability analysis have been presented in Table 1. From Table 1, it has been found that the proposed models are found to possess minimal environmental impact. Based on the conduct of case study, it has been found that the proposed knob designs are found to be sustainable. The agility and sustainability of the design and development process is found to be increased.

## F. CONCLUSIONS

The manufacturing organisations have been witnessing a transition from craft era to agile era. AM enables an organization to sustain in the competitive market scenario [12].Growing organisations are found to recognise sustainability as an important concept for survival in the competitive environment [3]. The combination of agility and sustainability is very much needed in the competitive situation. The case study has been carried out in an Indian rotary switches manufacturing organisation. The CAD model of the existing knob has been made. Then the new models of the knob have been derived. The sustainability analysis has been carried out for the baseline as well as the new models. The results of the sustainability analysis indicated that the new models are found to possess minimal environmental impact. The results of the case study indicated that there is an improvement of agility and sustainability.

## REFERENCES

[1]. Tanimizu Y, Sakaguchi T, Iwamura K, Sugimura N. Evolutionalreactive scheduling for agile manufacturing systems. InternationalJournal of Production Research 2006; 44(18): 3727 – 3742.

[2]. Vinodh S, Sundararaj G, Devadasan SR, Rajanayagam D. TADS-ABC: a system for costing total agile design system. International Journal of Production Research 2009; 47(24):6941–6966.

[3]. Bevilacqua M, Ciarapica FE, Giacchetta G. Development of a sustainable product lifecycle in manufacturing firms: a case study. Int. J. of Prod. Res. 2007; 45(18–19): 4073–4098.

[4]. Senthilkumaran D, Ong SK, Tan BH ,Nee AYC. Environmental life cycle cost analysis of products. Environmental Management and Health 2001;12(3):260-276.

[5]. Uribe AM, Cochran JK, Shunk DL. Two-stage simulation optimizationfor agile manufacturing capacity planning, International Journal ofProduction Research 2003;41(6):1181 – 1197.

[6]. Sarkis J. Benchmarking for agility. Benchmarking: An InternationalJournal 2001; 8(2): 88-107.

[7]. Gunasekaran A. Agile manufacturing: enablers and an implementationnetwork. International Journal of Production Research 1998; 36(5):1223-1247.

[8]. Gungor A, Gupta SM. Issues in environmentally conscious manufacturing and product recovery: a survey. Computers and Industrial Engineering 1999;36:811-853.

[9]. Kaebernick H, Kara S, Sun M. Sustainable product development andmanufacturing by considering environmental requirements. Robotics and Computer Integrated Manufacturing 2003;19(461-468).

[10]. Kumazawa T, Kobayashi H. Feasibility study on sustainable manufacturing system. Proceedings of Ecodesign 2003: Third International Symposium on Environmentally Conscious Design and Inverse Manufacturing Tokyo, Japan 2003.

[11]. Park J, Seo K. Approximate life cycle assessment of product concept using multiple regression analysis and artificial neural networks. KSME International journal 2003;17(12) :1969-1976.

[12]. Brown S, Bessant, J.The manufacturing strategy-capabilities links in mass customisation and agile manufacturing – and exploratory study. International Journal of Operations & Production Management 2003; 23(7): 707-730.

**M173**

# DESIGN & DEVELOPMENT OF FULLY AUTOMATIC PLATE MAKING MACHINE

Author Name - Vinayak Sadashiv Mane.
Student in Mechanical Engineering
D.K.T.E. Textile & Engineering Institute,Ichalkaranji.
Ichalkaranji, India.
Email id-vinayakmane6263@gmail.com

Authors Name- Prahlad S Badkar
Assistant Professor in Mechanical Engineering
D.K.T.E. Textile & Engineering Institute,Ichalkaranji.
Ichalkaranji, India.
Email id-prahaladsbadkar@gmail.com

*Abstract*— **A paper plate is a plate made out of paper andoften lined with plastic to prevent liquid from leaking out or soaking through the paper. The base paper for paper plates is called Kraft. This Kraft is coated with the thin layer of silver film. This paper is then pass through successive stages of rolling, and then gets wounded on a roller. Then it is cut for required dimensions (here 14x28 in). After then this paper of required dimensions is pass to the press machine for giving required shape of plate. The operations from taking out the roller of coated paper, cutting it for required dimensions and then transferring it to the press machine are carried out manually, our aim is to automate this operation. This project work deals with automating the above mentioned operations of manually operated paper plate making machine. Disposable food service products were initially developed to enhance public health by improving practices in the food service industry. This requirement when combined with the environmental threat faced by us at the turn of the 20th Century and need of strong efforts in order to conserve the environment gave birth to the concept of PAPER PLATES. There are several inherent advantages in using Paper Plates as compared to cups of other materials. These Paper Plates are gaining popularity all across the globe as a beautiful and stylish way of minimizing exposure to food borne infections. Paper plates have numerous advantages like; they are manufactured in a very simple process using Food Grade Raw Materials with least waste and are easiest to recycle. They are ideal for individual servings at all kinds of parties, functions, picnic occasions, marriages, chat, tea & food joints, etc. Non-toxic in nature, the shapes and surface designs on these paper plates are attractive and present an inviting look. These paper plates can also be custom printed with an outlet logo, brand punchline or advertising message.**

***Keywords—Paper plates, Kraft, silver film, rolling, press machine, automati***

## INTRODUCTION

at start of 20th century, there arises need to develop product which will preserve food for longer duration and keep it without getting infectious. Such idea logics will gave birth to concept of PAPER PLATE. These paper plate gain the popularity in all over world because its characteristics like Non-toxic in nature, design of shape, surface design are attractive

and feel pleasant to eye. Such disposable food service product manufactured with simple process by Food Grade Raw material with minimum waste and easy to recycle. They are very useful for individual servicing at all kind of parties, picnic, marriage occasion, chat tea and food joints etc. These kind of paper plate are made out of paper and often lined with plastic to prevent liquid from leaking out or soaking through the paper. The base paper for paper plates is called Kraft. This Kraft is coated with the thin layer of silver film. Silver has properties to kill bacteria and prevent growth of viruses hence helps to preserve food.

Such plates are made with utmost care to detail and are a unique addition to any table setting. Hence, the future of the proposed unit for manufacturing paper plates is very vibrant and will be a gesture towards supporting the usage of Eco-friendly product

## LITERATURE SURVEY

In ancient time, people generally use conventional crockery or steel utensils. These utensils need care in handling, have to be extra cleaned before and after use, need lot of space for storage. Also, food stored in utensils gets infectious easily and hence food does not remain for longer time.

In contrast disposable paper plates are made out of special quality paper reinforced with polythene sheets to make it leak proof. These plates are easy to handle, lightweight, disposable after use, cheaper and can be easily stored. Non-toxic behavior of such plates helps to preserve food for longer duration.

To build such plates we decided to develop fully automatic paper plate making machine. We met Mr. Ganesh Kamble (design Engg.). He is working on SPM TOOLS Pvt. Ltd.

Ichalkaranji. He gave us the complete idea of feasibility of the project. He gave essential contact of vender of FIE GROUP of manufacture and small scale industries.

We carried out a survey of some industries and come across different constraints listed below:

J. Wide range of materials
K. Components
L. Cycle time
M. Automation
N. Return of investment
O. Ergonomics
P. Safety

*1. Wide range of materials:*

Mainly there are five types of materials used in industries to build paper plates such as aluminum, cast iron, brass, acrylic, wood.Also, for cutting this material various parameters are utilized are blade speeds, feed rate, depth of cut etc.

*2. Work pieces:*

Generally, plates gets developed in two sizes viz. square and circular.

*3. Cycle time:*

Cycle time of a machine plays a vital role in the growth of the industry. So it should be minimum to perform its function. In conventional cutting machines the manual clamping and feeding affects the cycle time but it can be reduced by choosing well skilled and experienced workers.

*4. Automation:*

It is the backbone of a modern industry which makes industry sophisticated and takes it at next level. It involves the use of sensors, actuators, PLC's and the working media as hydraulics and pneumatics. Automation increases the overall cost of the system.

*5. Return of investment:*

An industry always needs its machine to pay back whatever it has invested in it within certain time. This factor is vital in growth of an industry as it involves a huge investment .The return may lead to further investment.

*6. Ergonomics:*

It applies human biological science along with discipline of engineering science can achieve optimum manual human intervention; this effectively increases the human efficiency and reduce human fatigue.

*7. Safety:*

Safety aspect play vital role while creating plate making machine. Man and machine should be highly interfaced so as to perform well so the machine needs to be safe enough.

OBJECTIVE

After evaluating the existing machine in market we feel to improve overall parameter and working characteristics of our machine. The recognized objectives were:

LL. Improve machine capacity.
MM. Increase production rate.
NN. Automation.
OO. Increase overall efficiency of system.

## SYSTEM ARCHITECTURE

Proposed model of paper plate making machine is shown in following Figure.The laminated roll is taken out from the machine and kept on the first stand. At opposite end a pulling roller is kept. The function of pulling roller is to pull the laminated sheet from the die successively as soon as the punching operation completes. The punching time of machine is so adjusted that the required plate is cut within the stipulated time. Number of rollers can be used simultaneously for punching more sheets at a time. Thus increasing production rate.

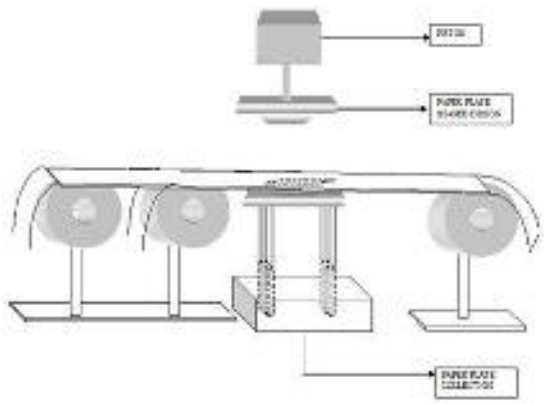

Fig- Proposed model of paper plate making machine

Raw material used to create paper plates are paper and plastic sheet. Initially both these raw materials are passed in laminating machine through roller. Laminating machine then laminated plastic sheet over the paper which results in Kraft. This laminating process helps paper plates to achieve its non-leaking characteristics. Hence preventing liquid food from pouring out of plate.Moving ahead, this Kraft is then processed further inside punching machine were get cut in accurate dimensions and size. In this way, we got our final

product i.e paper plate by going to three structures raw material, laminating machine, punching machine.

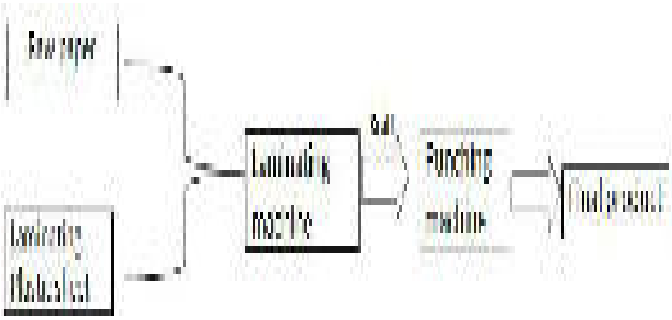

CALCULATION

Below are various calculations required for building of paper plates making machine part:

*HYDRAULIC CYLINDER:-*

Cutting to single (one) plate required 500kg. So, cylinder diameter is 65 mm and pressure is 22 bar. Calculating force required,

Using power formula,

C. P = F/A
D. 22 = F/(Π/4 ×D^2 )
E. 22 = F/(Π/4 ×(6.5)^2 )
∴F = 730 kg.
So, design is safe.
Because 500<730
kg

*DESIGN OF HYDRAULIC CYLINDER :*

Bore diameter: 65 mm, Stroke length = 300 mm.
So, calculate volume.
Volume = π/4 ×d^2× L

G. π/4 × 【65】^2× 300
H. 995492.17 mm3
I. (1267.5 【cm】^2)/1000 = 1.2 lit.

Capacity of oil =1.2 lit.

*CYCLE TIME CALCULATION:-*

Require cycle time = 20 Sec.
5 sec. upward, and 5 sec. downward direction, remaining 10 sec. for pressing.
Required stroke length = 250 mm.
Suppose in 5 sec. = stroke length 250 mm
So, in 1 min. = stroke length is 3000 mm.
*Required velocity 300 cm/min.*

∴A = Π/4 ×(6.5)2
= 33.18 Cm2

So, Q = flow of pump.
Q = 300 × (33.18+33.18)
= 19908 = 19908/1000 = 19.9 LPM REQUIRED

*OIL TANK CAPACITY:-*

Required oil tank capacity = 1.2 14 times = 16.8 ~ 17 lit.
Volume of oil tank = 20 × 27 × 50
= 2700/100 = 27 lit.

*DISTRIBUTION OF CONTROL VALVE: - (3C4)*

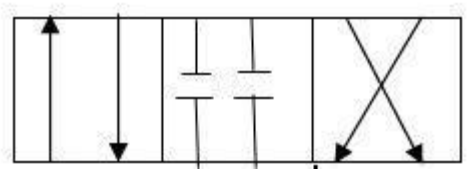

*Motor Selection:*

19 LPM = 5.019 GPM
22 bar =318 psi
So,
hp =Q × P
=5.019×318
=(5.019×318)/(1714 × 0.8 ) ×0.8) = 1.96 ~ 1.5/2 HP

MAJOR PARTS OF FULLY AUTOMATIC PLATE MAKING MACHINE

DIE
ROLLER FRAME
ROLLER SUPPORT FRAME
RUBBER ROLLER
ADJESTOR
OIL TANK
HYDRAULIC MOTOR
HYDRAULIC POWER PACK
CONTROL PANEL
HYDRWALIC CYILENDER
HOSE PIPE
MOTOR
BLETS
BEARINGS
CONTROL VALVES
HEATING ROLLER

Drafting of plate making machines part are as follows:-

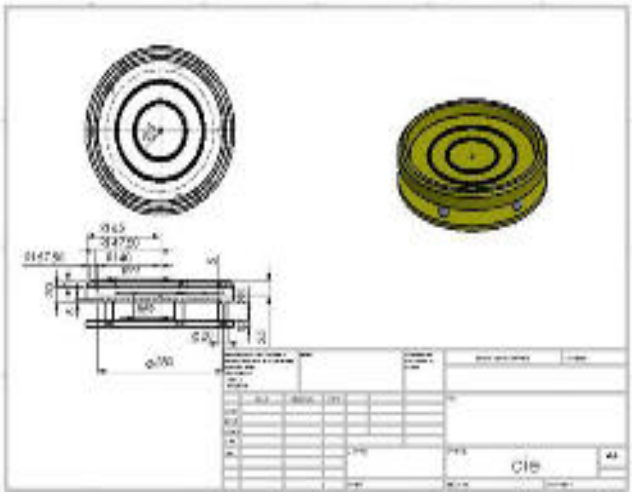


Fig-Drafting of Dia

Fig- Roller support Frame

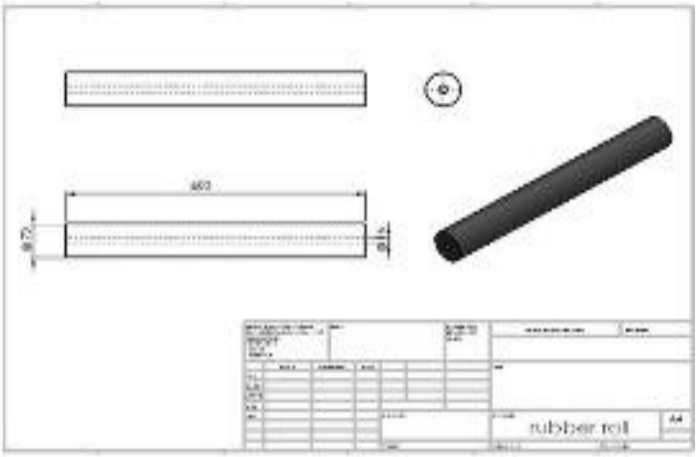


Fig- Fig-Rubber Roller

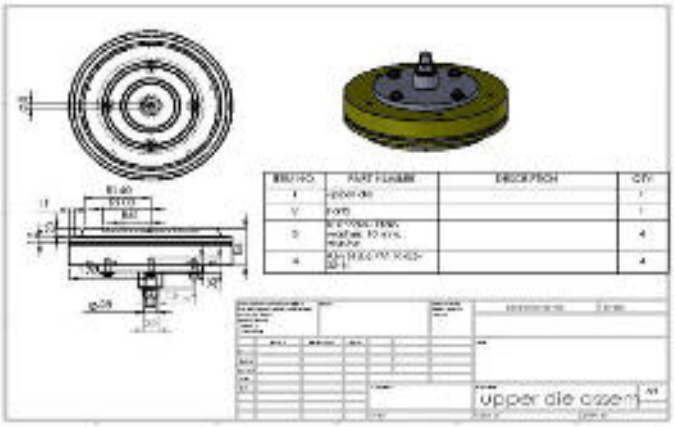


Fig-Drafting of Upper Dia

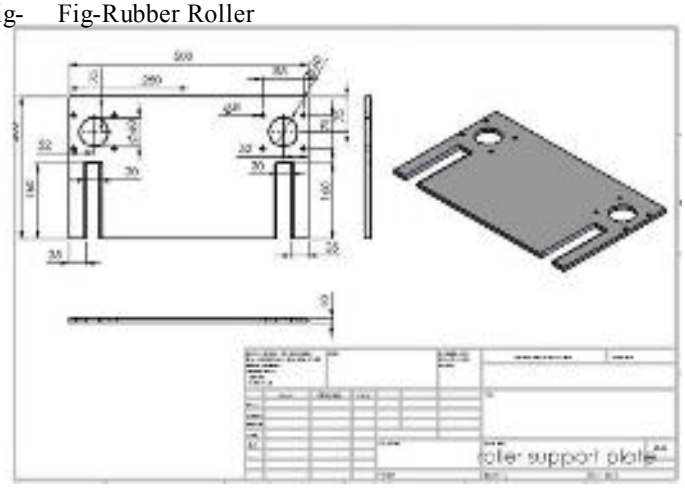


Fig-Roller support plate

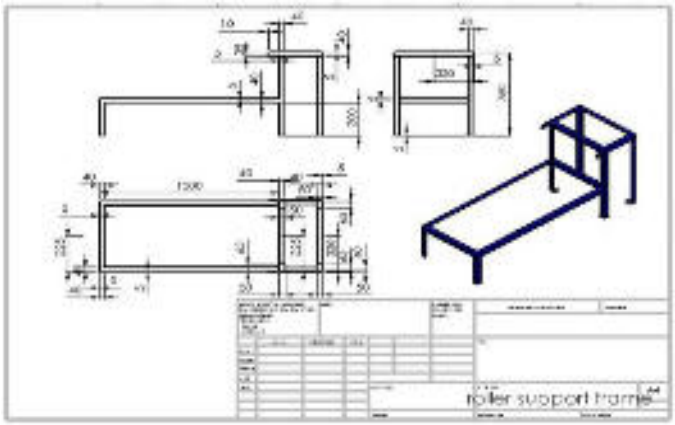


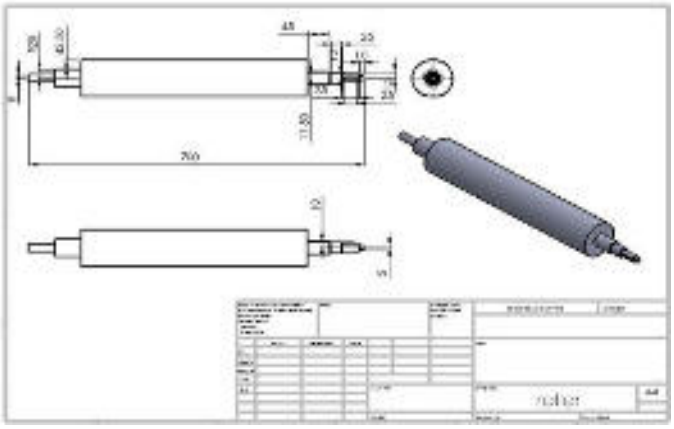

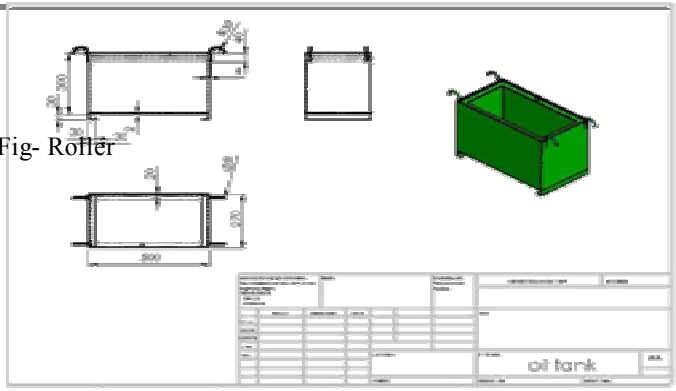


Fig- Roller

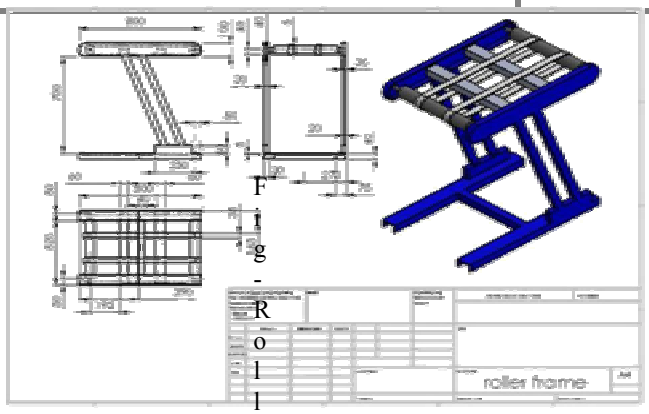


Fig-Roller Frame

Fig-Oil Tank

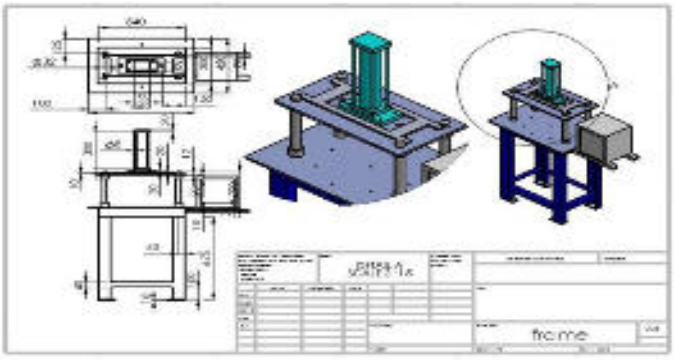


Fig-Frame

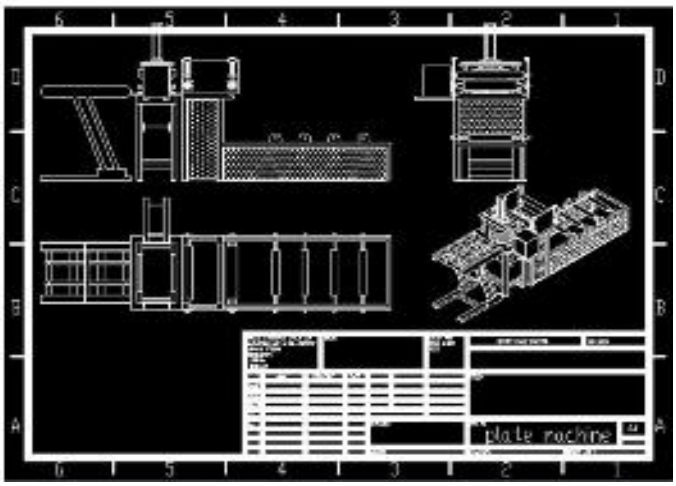


Fig-Design of Fully automatic plate making machine

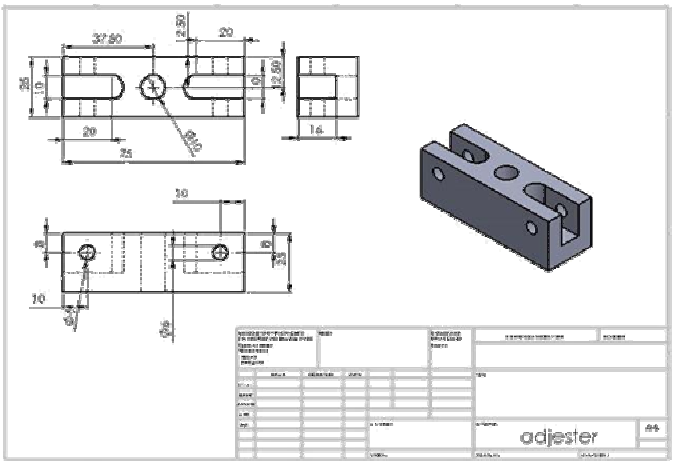


Fig-Adjestor

Picture of plate making machine.

TRAIL ON MACHINE

Fully automatic machine has more productivity than conventional machine. Table showing data points of productivity of these two machines is outlined below:

| Sr. No. | Pressure (bar) | Conventional machine (No. of plate cutting) | Fully Automatic machine (No. of plate cutting) |
|---|---|---|---|
| 1 | 10 | 1 | 1 |
| 2 | 20 | 1 | 2 |
| [illegible] | 30 | 2 | 3 |
| 4 | 35 | 2 | 4 |
| 5 | 40 | 2 | 5 |
| 6 | 45 | 2 | 8 |
| 7 | 50 | 2 | 10 |

From above table we can easily observe efficiency of automatic machine in contrast to conventional machine.

ACKNOWLEDGMENT

It is with immense pleasure that we are presenting our project on "DESIGN AND DEVELOPMENT OF FULLY AUTOMATIC PLATE MAKING MACHINE".At the outset, we would like to pay our respect and profound gratitude to our project guide PROF. P.S.BADKAR for his timely advice without whose motivation and expert council this project would have been devoid of its richness. We would like to express our sincere gratitude to our head of department PROF.DR.V.R.NAIK for his valuable role in making this project successful.

CONCLUSION

Paper plates can be manufactured at high rate with the available machines. Manufacturing normally requires hydraulic press machines to operate at a very high speed. But the problem is that they are used for making one or two plates simultaneously, which shows a less production rate. Therefore there may be the chances of increase in production rate by simultaneously punching the number of sheets in a single pass.

- Possibility of increase in production rate.
- Speed of the roller and punching is to be synchronized for cutting the plate of required length.
- Design of Die is to be optimized for accurate punching operation.
- Temperature control of die is the important parameter.

REFERENCES

[1] "Development of paper plate making machine", Mr. Chetan P. Sable1, PROF. P. D. Kamble2, Mr. Dhiraj D. Dube3, Chetan Sable, IJPRET, 2014; Volume 2 (9): 90-96

[2] "Automatic Paper Plate Making Machine" Mr.Sanchit Gaikwad, Mr. Amol Kalokhe,(IJREAM) ISSN : 2494-9150 Vol-02, Issue 01, APR 2016.

[3] "REVIEW ON PAPER PLATE MAKING MACHINES"Mr. Chetan P. Sable1, PROF. P. D. Kamble2, Mr. Dhiraj D. Dube3, Chetan Sable, IJPRET, 2014; Volume 2 (9): 90-96

*JOURNALS:-*

International Journal of Research in Aeronautical and Mechanical Engineering, VOL.1 Issue.8, Dec 2013

Satyajit Sinha: Business plan for a Paper Plate manufacturing unit Query Resolution Volume 2 Issue 7 16th march 2011, Page No.6 16th March, 2011

Department of Energy Science and Engineering (DESE), IIT Bombay Mumbai, Maharashtra, India

International Journal Of Engineering And Computer Science ISSN: 2319-7242 Volume 2 Issue 8 August, 2013 Page No. 2310- 2314.

**M174**

# Foundry sand reclamation using fluidized bed combustor

Vishal J. Savant
PG student, Department of Mechanical Engineering.
DKTE Society's Textile and Engineering Institute,
Ichalkaranji, India.
vishalsavant20@gmail.com

Prof. P. N. Gore
Assistant Prof. Department of Mechanical Engineering
DKTE Society's Textile and Engineering Institute
Ichalkaranji, India.
purushottamgore@yahoo.com

Utkarsh A. Patil
PG student, Department of Mechanical Engineering.
DKTE Society's Textile and Engineering Institute,
Ichalkaranji, India.
utkarsh.patil546@gmail.com

**Abstract— This paper studies thermal and mechanical sand reclamation system. It emphasizes the need of compact thermal sand reclamation process for smart foundry. This paper generates alternative ideas and conceptual design for foundry sand reclamation. A fluidised bed combustor is good alternative for foundry sand reclamation process. Fluidized bed combustor consist of internal chamber, heating coil, insulation and nozzle for develop conceptual model. FBC system contains selection or design of fluidized bed structure, design and selection heating coil such as furnace coil heating technique. selection or design of Suitable insulation for 550 to 800 degree Celsius temperature and nozzle selection or design for sand bubbling process. Homogeneous heating of sand take place with the help of fluidized bed also Nozzle design is such a way that sand does not enter inside the nozzle. The requirement of such reclamation unit are very important than previously developed sand reclamation unit. It generates alternative for foundry sand reclamation.**

*Keywords - sand reclamation, mechanical reclamation, thermal reclamation, structure design/selection, foundry sand, nozzle selection/design, heating coil, thermal insulation etc.*

## Q. INTRODUCTION

In foundry technology, the main component for making multi purposed core and moulds is silica sand but now-a-days we are having problems for getting sand sources for future foundry product. Today foundry faces serious shortage of foundry sand. The used sand comes with toxic effects that are harmful for soil as well as air and underground water; hence

foundry sand reclamation process is essential. Reclamatiooffers replacement of fresh sand consumption in foundry use by recovered sand. Reclaimed sand is also economical than the new sand considering cost, transport cost etc.

There are main two types of reclamation process,

PP. Mechanical reclamation

QQ. Thermal sand reclamation

In mechanical attrition reclamation process; vibration, rubbing etc of sand takes place so that this process fails to remove all binder from the used sand. New sand addition is necessary for further use in foundry mould and core production.

Thermal reclamation is the process in which foundry used sand is heated to temperature of about 600-850$^0$C. This temperature is obtained in specially designed furnace. This process is highly effective than mechanical reclamation for removing the binders from foundry used sand. Various sections are involved in this process such as Lump breaker, Pneumatic lines for transporting breaked sand, fluidized bed, sand cooling system etc. In fluidized bed combustor the main source for combustion is gas but for small scale thermal reclamation setup heating coil is alternative for gas.

Now-a-days various capacity thermal reclamation systems are available. In most cases capacity of thermal reclamation system is 1 ton to 10 ton. Some, 250 kg capacity unit are also available. They are specially designed for large and medium size foundry unit. Fluidized bed combustion unit size is also large for above capacity. Generally they use gas combustion unit for sand reclamation. If the size of the reclamation unit is small than there are number of energy sources are available. The selection of energy source is based on suitability, economy etc. Some energy sources like LPG, heating coil etc. give better result Need to develop new product within a short time, has given rise to new processes like rapid prototyping. There is a need of smallpaper are available for large capacity thermal reclamation system but it is difficult task to design/selection of small size capacity foundry sand fluidized bed combustor. To overcome this problem it is required to

analyze, design and develop new fluidized bed combustor system which may handle very small capacity of sand.

### F. LITERATURE REVIEW

In the view of current research area various research papers and journals are referred for understanding sand reclamation process and fluidized bed system. Some of papers and journals are arranged are as follows (Holtzer et al., 2003) [1] studied the Reclamation of foundry mould; core sand is possible by using heat treatment. Saving of silica sand using thermal reclamation process is possible. This paper gives the idea about reclamation of foundry sand is possible or not. (Joseph et al., 2017) [2] identified that number of small foundry's have not understand the quality and reusability of foundry mould and core sand. It is important to study the quality of sand for reusability purpose and foundry economy purpose. Also while using the foundry sand, consideration of initial investment required for installation of small reclamation unit for small foundry are important. (Ramana, 2015) [3] has given information about which one reclamation process is better from thermal reclamation process, dry reclamation process.dry reclamation process suitable one when the binder coat on sand grain is brittle. Also according to the reclamation process selection of binder is done. (Lucarz, 2013) [4] has discussed different construction of thermal reclamation units like horizontal, vertical etc. also the position of various units for best reclamation result in efficient way by considering method of reclamation, temperature, path of fluidization. (Lucarz, 2015) [5] has presented ecological reasons, according to reclamation temperature for binder, suitable air supply etc. reclamation chamber heating to low temperature for energy saving purpose As well as maintain suitable volume of combustion chamber without affecting reclamation process result. (Andrade et al., 2005) [6] studied thermo mechanical regeneration and leaching processes and influence of additive on the improvement of the mechanical properties of the sands, also gives ideas about calcination of foundry sand at the range from 450 to $550^0$ C either using coupling additives or inorganic. This temperature is sufficient to obtain the initial properties of foundry sand. (Lucarz, 2015) [8] identified similar destruction for binder which have urea formaldehyde resin, urea-furfuryl resin and alkyd resin during temperature increase, so that identification of temperature ranges for particular binder destruction possible. (Berruti et al., 2009) [9] presented attrition nozzle of fluidized bed for green sand reclamation process. Maintain nozzle pressure 350 or 550 kpa help to attrition process. It is possible to use nozzle pressure for sand bubbling process in silica sand reclamation system. (Singh et al., 2016) [10] presented ash cooler by using circulating fluidized bed there they uses this type of techniques for ash cooling also for continuous movement of ash they uses bubbling effect with help of proper design and arrangement of nozzle. This technique also useful for continuous movement of sand during heating process

### J. STUDY OF FOUNDRY SAND RECLAMATION

There are various types of foundry sand reclamation techniques such like a Mechanical Attrition Reclamation and Thermal Sand Reclamation from these two types of reclamation processes widely used technique is thermal sand reclamation. Thermal sand reclamation technique actually uses mechanical attrition as well as thermal reclamation in this process sand is heated at about 800 degree c. this process of reclamation is carried out in specially designed furnace where the sand is both fluidized as well as heated.

Thermally reclaimed sand is better than mechanically reclaimed sand as well as fresh sand because of follows reasons:

- Thermally reclaimed sand is good than fresh sand because it is more rounded in shape causing lesser binder demand.
- Thermally reclaimed sand can be used with any chemical binder system in the subsequent manner.
- As most of the sand is reused, almost no dumping is necessary resulting in safer environment.
- Conserves natural resources by eliminating need of new sand.
- This is a highly energy efficient process.

#### A. Differentiation of Thermal Sand Reclamation

Differentiation of thermal sand reclamation depends on various factors like available space, quantity of used foundry sand, Economical, environmental, technical.

##### 1. Available space

According to the available space design of thermal sand reclamation take place general design of reclamation plant is horizontal, due to this type of design, capacity of reclamation plant increases. In some cases space for reclamation are small that time compact structure reclamation plant is very important.

##### 2. Capacity of reclamation plant

Reclamation plant capacity is totally depends on space available for reclamation but if capacity of plant are small compared to other reclamation plant then there is big changes in structure of plant for small reclamation unit structure of reclamation is vertical otherwise it is horizontal, Vertical structure save more space also it is economical one.[4]

##### 3. Technical

Technical point include above all point during design process, according to technical data design, structure, cost, available space etc. take as a primary input. During development process three trends can be found in literature the first one is concerned with production plant which, driven by economical reasons for their own purpose. The second trend concern with use of particular sources of energy in order to provide economical reclamation system and the third trend of the development of thermal reclamation appliance on performance base, in this technique use of newly modified techniques are develop.

Comparative research on thermal reclamation carried out by the use of already existing unit of commonly known principle of operation and newly developed unit of reclamation.

Fig.1. Horizontal thermal sand reclamation unit

Fig.2. Vertical thermal sand reclamation unit

B. Fluidized Bed Type

Fluidized Bed types are classified based on flow behavior is as follows;

1. Vibratory fluidized beds – Vibratory fluidised bed are similar to stationary beds, but add a mechanical vibration to further movement of the particles for particular work.

E. Circulating fluidized beds (CFB) – In CFB, developed gases are re-circulated via an external loop back into the reactor bed.

F. Annular fluidized bed (AFB) – In annular fluidised bed a large nozzle at the centre of a bubble bed introduces gas as high velocity achieving the rapid mixing zone then found in the external loop of a CFB. Due to high velocity its difficult task to maintain constant temperature and reduce temperature drop problem.

G. Mechanically Fluidised Reactor (MFR) - Mechanical stirrers is used for particle movement and achieves properties similar to that a well-mixed fluidised bed. It does not require fluidisation any type of air or gas.

H. Bubbling fluidized bed – Bubbling fluidized bed is the technique where the air or gas at low velocities is used and fluidization of the solids fine particles take place.[10] because of bubbling fluidized bed problem of temperature drop reduces.

Pictorial representation of fluidized bed combustion is given in the figure be

Fig.3. Fluidized bed combustion

C. Heating unit

Thermal sand reclamation process is totally depends on the heat treatment generally there are three temperature ranges for removing binder from foundry sand. Temperature range are as follows first, 400 degree c. for low temperature reclamation, 600 degree c. for medium temperature reclamation and the last one is 850 degree c. for high temperature reclamation. According to this temperature various heating sources are used. However, the operation of most of them is based on the process of gas burning. In such

condition used sand is reclaimed in the fluidized bed. A gas burner type technique basically suitable for large capacity horizontal type of reclamation unit, control over the gas burner is quite difficult and skilled work.

Another type of energy sources for reclamation process is found in market but electrical current as to initiate the process of burning. The advantage of this technique is the fact that there is no loss of energy because grains are not overheated.

Following are some advantages of electric heating techniques

**[13]** With the help of electrical current heating technique protection of grain from overheating as well as focusing on efficient energy use.

**[14]** For compact size reclamation plant electric heating technique is preferred.

**[15]** No need of developing special arrangement for heat control.

**[16]** Temperature range like low, medium, high creation is not big task. Control of temperature is quite easy then gas heating technique.

Required temperature creation with the help of heating Coil is quite easy. This type of induction heating technique is widely use for melting metal. For example to melt aluminium with the help of induction coil, 4.86 kw power heating coil required. (Literature) by using this technique heating coil design or selection is possible.

Following are two types of heating unit exist in the market for various purposes.

Fig.4. Gas burner heating unit

Fig.5. Induction melting furnace heating coil

D. Insulation

"Insulation is a material or substance that is used to stop heat, electricity going into or out of something."

A thermal insulator is a poor conductor of heat and has a low thermal conductivity. Insulation is used in manufacturing processes to prevent heat loss or heat gain. Although its primary purpose is an economic. Some benefits of insulation are as follows.

- It Provides fire or heat protection to equipment.
- It Reduces over-all energy consumption.
- No Heat absorption and subsequent dissipation.
- It create Environmental friendly atmosphere, with the right insulation, you can reduce the use of excessive energy, which in turn reduces CO2 emissions into the atmosphere

Classification of Insulation:

According to the temperature ranges and application insulations are classified are as follows:

1. Low Temperature thermal Insulations (up to 90$^{o}$C)

This range of temperature covers insulating materials for refrigerators, chilled and hot water storage unit, etc. The commonly used materials are Cork, Wood, magnesia, Mineral Fibers, Polyurethane and expanded Polystyrene, etc.

- Medium Temperature thermal Insulations (90 – 325$^{o}$C)

Insulators in this range are used in low temperature, heating and steam raising equipment, steam lines, flue ducts etc. The types of materials used in this temperatures range include 85% Magnesia, Asbestos, Calcium Silicate and Mineral Fibers etc.

- High Temperature thermal Insulations (325$^{o}$ C – above )

Typical uses of such materials are super heated steam system, oven dryer and furnaces etc. The most extensively used materials in this range are Asbestos, Calcium Silicate, Mineral

Fibre, Mica and Vermiculite based insulation, Fireclay or Silica based insulation and Ceramic Fibre.

Fluidized bed combustor use heating coil to achieve temperature at about 800 degree c. because of that temperature large amount of heat is generated ,due to this temperature possibility of human injury as well as system performance defect to avoid this injury and defect it is very important to provide a insulation over a heating coil.

High temperature insulation; ceramic wool are suitable over heating coil of fluidized bed combustor for foundry sand reclamation.

### E. Nozzles for sand bubbling effect

"Bubbling effect of the sand is the phenomena inwhich, minimum air or gas are supply to obtain bubbling of sand." Design of nozzle for particular work by using sand bubbling effect in such a way that sand does not go inside the nozzle during working process. Design of nozzle for particular air flow in such a way that nozzle air outlet size less then sand grain size. For example if gain size of sand is 0.350 mm then size of nozzle hole should be 0.300 mm.

Fig.6. Sand bubbling phenomena

## IV. CONCEPTUAL MODEL OF FLUIDIZED BED COMBUSTOR

Conceptual model of fluidized bed combustor based on above mentioned data are as follow

Fig.7. Conceptual model of fluidized bed combustor (a)

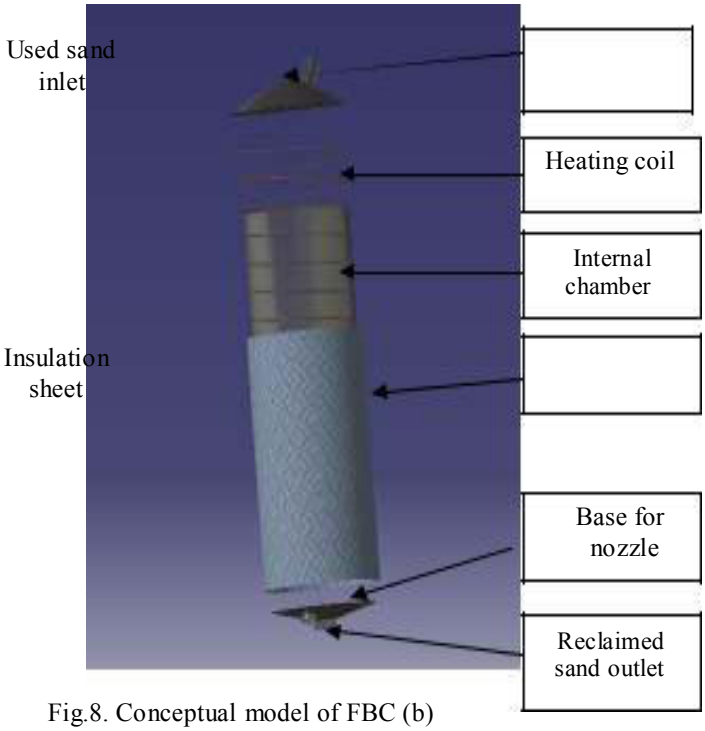


Fig.8. Conceptual model of FBC (b)

## CONCLUSION

The reclamation processes used today have several limitations in the form of required space, heating unit, suitable sand bubbling unit etc. this limitation need to eliminate, but present thermal foundry sand reclamation unit designed for particular work these are not capable to eliminate all problem. Due to this, there is requirement of specially arranged and designed portable fluidized bed combustor for foundry sand reclamation. By using furnace design reference it is possible to

design structure for FBC also design of heating unit such as coil and insulation; for suitable sand bubbling effect design of nozzle by considering sand grain size is possible.

ACKNOWLEDGMENT

The authors are grateful to the my project guide Prof. P. N. Gore Department of Mechanical Engineering, for providing unreserved guidance, inspiring discussions and constant supervision throughout this research work.

REFERENCES

[1] J. Danko, R. Danko, M. Holtzer (2003) "Reclamation of Used Sand in Foundry Production" Metalurgija, 42, 173-177.

[2] M. Joseph, F. Banganayi, D Oyombo (2017) "Moulding Sand Recycling and Reuse in Small Foundries" international conference on sustainable material processing and manufacturing, 7, 86-91.

[3] M. Ramana (2015) "Moulding Sand Reclamation-A Brief Review" International Journal of latest Trends in Engineering and Technology, 5, 133-137.

[4] M. Lucarz (2013) "The Stand Adopted For Process Investigations Thermal Reclamation" Archives of Foundry Engineering, 13, 103-106.

[5] M. Lucarz (2015) "Ecological Aspects of The Performed Thermal Reclamation" Archives of Foundry Engineering, 60, 329-333.

[6] N. Cruz, C. Briens, F. Berruti (2009) "Green Sand Reclamation Using Fluidised Bed With Attrition Nozzle" Elsevier Science Direct, 54, 45-52.

[7] R. Andrade , S. Cava , S. Silva, L. Soledade, C. Rossi, E. RobertoLeite, C. Paskocimas, J. Varela, E. Longo (2005) "Foundry Sand Recycling In The Troughs of Blast Furnace: A Technical Note" Journar of Materials Processing Technology, 159, 125-134.

[8] M. Lucarz, B. Grabowska, G. Grabowski (2014) "Determination of Parameters of The Moulding Sand

[9] Reclamation Process, on The Thermal Analysis Bases" Archives of Metallurgy And Materials, 59, 1024-1027.

[10] M. Lucarz (2014) "Analysis of the Selected Parameters of the Thermal Reclaimer" Archives of Foundry Engineering, 14, 67-72.

[11] Singh, K. Ghule, (2016) "Design, Development, Experimental CFD Analysis of Prototype Fluidized BedStripper Ash Cooler" Elsevier Science Direct, 107, 1077-1090.

**M175**

# Investigation on Process Parameters of Flamboyant Pod Particles Reinforced Polymer Composites Using Design of Experiment Approach

Shivaraj Bevoor[1], G. U. Raju[2], V.N. Gaitonde[3]
[1,2,3] School of Mechanical Engineering
KLE Technological University Technology, Hubballi, Karnataka, India – 580 031
[1]shivarajsb1996@gmail.com,[2]rajugu@rediff.com,[3]vngaitonde@bvb.edu

***Abstract* - Nowadays, thermoplastic and thermoset polymersare combined with natural fillers to produce the composites, which possess better strength and good resistance to fracture. Due to an excellent property profile, these composites find wide applications in packaging, building and civil engineering fields. The present work aims to elucidate the optimization of mechanical and physical properties such as flexural, moisture content and density of flamboyant pod particles reinforced polymer composite materials. The composite specimens were prepared with different weight percentages of randomly distributed flamboyant pod particles (FPP) of different sizes in polymer matrix using MWCNT as secondary reinforced material. Utilization of flamboyant pod particles in polymeric composites made the composite lighter and cost effective. However, further enhancement on the strength and stiffness of these polymer composites are required for some applications. For this reason multi-walled carbon nanotubes are effectively used as secondary reinforcement material which enhances strength and stiffness of the composites. The experiments were planned as per Taguchi L9 orthogonal array. The analysis of means (ANOM) was performed to determine the optimal parameter levels and analysis of variance (ANOVA) was employed to identify the level of importance of the parameters on each of the properties. The results revealed that using flamboyant pod particles as reinforcement for polymer matrix and MWCNT as secondary reinforcement material could successfully develop beneficial composites and can be used for mechanical applications. From the results of the experiments, it has been observed that the sample 2 has maximum MOR of 59.7 6MPa and sample 8 has maximum MOE of 5.206 GPa. The density test results shows that sample 9 has minimum density of 951.84. kg/m$^3$. Moisture content of flamboyant pod particles reinforced composites varies from 0.23 to 0.60 percentages.**

*Keywords— Flamboyant pod particles; MWCNT; Taguchi design; ANOM; ANOVA*

### *1. Introduction*

Due to increased environmental consciousness throughout the world the application of natural fibers has drawn much attention in different engineering fields. Use of natural fibers as reinforcing materials in thermoplastics and thermoset matrix provides optimistic environmental profits with regard to ultimate disposability and better use of raw materials. The natural fibers are now believed to be an alternate to synthetic fibers such as glass fiber, carbon fiber, etc. Presently, lignocellulosic bio-fibers as reinforcing materials are being utilized widely for the manufacture of cost effective eco-friendly bio-composites. Due to better strength properties such as easy availability, light weight, high toughness, non-corrosive nature, low density, low cost, good thermal properties, reduced tool wear, less dermal and respiratory irritation, less abrasion to processing equipment and renewability the natural fibers are preferred over synthetic fibers and hence find wide applications in different industries. In recent years, major industries such as automotive, construction and packaging industries have shown enormous interest in the development of new bio-composite materials and are currently engaged in searching for new and alternate products to synthetic fiber reinforced composites.

Many authors have reviewed the latest developments in the application of natural fibers [1]. The widespread investigations on the preparation and properties of thermoset and thermoplastic composites with the application of natural fibers such as coir fibre [2-4], groundnut shell particles [5, 6] and corn cod particles [7] have also been carried out. The natural fibers are used for variety of appliances such as packaging, low-cost housing and structures and the use of agricultural crop residues could progress rural agriculture based economy. J.H. Lee [8] et.al carried out experiment on the CNT mixed basalt/epoxy Composites. It is reported that as a result of carbon nanotube (CNT) modification in CNT/basalt/epoxy composites, the tensile strength and Young's modulus of CNT/basalt/epoxy composites were improved to 34 and 60% greater respectively than that of unchanged CNT/basalt/epoxy composites.

H.B Jalageri [9] et.al investigated experimentally about mechanical strength of composites reinforced with cenosphere. The study investigated the feasibility of using MWCNT and cenosphere particles in polymer for the manufacture of composite panel. The result show that a useful composite with moderate strength could be successful using a MWCNT & cenosphere particles in epoxy resin. These composites found to have good mechanical properties. There is enhancement in the modulus rupture and modulus of elasticity due to addition small amount of MWCNT in cenosphere and epoxy composite. The highest tensile, bending strength were observed at 0.2% of MWCNT loading. Similarly highest impact strength was observed under 0.5 %

MWCNT. It was observed that beyond 0.2wt % loading MWCNT reduces the strength of the composite possibly due to agglomeration.

Metin Sayer [10] et.al studied the impact behavior of hybrid composite plates. The failure processes of damaged specimens for different impact energies were evaluated by comparing load–deflection curves and images of damaged samples taken from impacted sides and non-impacted sides. The perforation threshold of hybrid composite impacted from surface with carbon fibers was found approximately 30% higher than that of surface with glass fibers. Maya Jacob [11] et.al carried out a review study on the various cellulosic fibers and bio composites. Bio fibers like sisal, coir, hemp, oil palm are now finding applications in a wide range of industries. Results showed that a significant increase in Young's modulus and tensile strength from 0.51 to 344 MPa and 4.27 to 14.96 MPa, respectively, with increasing filler content from 0 to 30 wt%.

The natural fiber-plastic composites found numerous applications in automotive sector, building and construction, even though these materials have poor compatibility between hydrophilic natural fibers and hydrophobic polymer matrices. As per literature survey it is observed that no investigation has been discussed in the literature on optimization of mechanical and physical properties of flamboyant pod particles reinforced polymer composite materials. Hence, an attempt has been made in this paper to optimize the mechanical and physical properties of flamboyant pod particles reinforced polymer composite materials (FPPC) materials using Taguchi technique. The novel bio-based composite materials were prepared from flamboyant pod particles in polymer matrix. Taguchi L9 orthogonal array was used to conduct the experiments. The analysis of means (ANOM) was employed to identify the optimal level of each parameters and the analysis of variance (ANOVA) was used to find the relative importance among the parameters.

## 2. Materials and methods

### A. Primary reinforcement material (Flamboyant pod particles):

Flamboyant pod particles (FPP) are extracted from the pods of the flamboyant trees and these trees were abundantly available in tropical regions. Delonix regia is the scientific name of the tree. Royal Poinciana is another name of this tree. The royal Poinciana requires a tropical or near-tropical climate, but can tolerate drought and salty conditions. Flamboyant pod particles were mainly consisting of cellulose, hemi cellulose and lignin as their major composition. The appropriate chemical treatment changes the chemical composition to improve the different properties of the pods particles. In the present work, flamboyant pods were treated with NaOH and pods were ground into small particles and are separated using sieves. Chemical testing of flamboyant pod was carried out in Essar Laboratories & Research Centre; test report is tabulated in Table 1.

### *B. Matrix material (Epoxy resin):*

Epoxy resin is the thermoset plastic materials and possesses excellent characteristics like good adhesive strength, low curing contraction, and excellent mechanical strength. Epoxy resin of Lapox 12 with hardener K6 was purchased from Yuze enterprises Bengaluru. The epoxy resin and the hardener was mixed in the ratio of 10:1 by weight.

**Table 1.** Chemical Composition of Flamboyant pods particles

| Sl No. | Parameters | Values |
|---|---|---|
| 1 | Cellulose | 42.0% |
| 2 | Hemi cellulose | 19.0% |
| 4 | lignin | 17.0% |
| 3 | Moisture | 5.8% |
| 5 | Ash | 1.12% |

### C. Secondary reinforcement material (MWCNT):

Carbon nanotubes (CNTs) describe a family of Nano materials made up entirely of carbon. MWCNTs consist of multiple layers of graphite superimposed and rolled in on to form a tubular shape. Three properties of MWCNTs are specifically interesting for the industry: the electrical conductivity (as conductive as copper), their mechanical strength (Up to 15 to 20 times stronger than steel and 5 times lighter) and their thermal conductivity (same as that of diamond and more than five times that of copper). A combination of these impressive properties enables a whole new variety of useful and beneficial applications.

### *D. Taguchi design method*

In early stage of the project, generating information about how the different particle parameters affect the mechanical and physical properties of the composite is an important task. This can be achieved by using Taguchi design method [12, 13]. This is the most powerful methodology, which enables the designer to identify which parameters affect the most to improve the product quality with minimum number of experiments by reducing the time and cost of the experimental research. Taguchi design method employs the signal to noise ratio (S/N ratio) to measure the performance characteristic and ANOVA (Analysis of variance), ANOM (analysis of mean) to identify the important process parameters [12,13].

## *3.Experimental details*

Clean and dried Flamboyant pods were initially washed with water to take away the sand and other impurities. The washed pods were later chemically treated with 10% NaOH solution for 2 hours and then washed with distilled water until all NaOH gets eliminated [14]. Subsequently, the pods were solar dried and ground. Then the particles were sieved through 150, 212 and 300 µm sieves to get different size flamboyant pod particles. These particles are used as reinforcement material in polymer matrix.

### *A. Preparation of composite board*

A mould with the dimension of 230 × 160 mm on which the 7mm thickness plates has been used to prepare the composite specimen. A mould box was cleaned with an ethanol solution to remove the dust on the surface of the mould box. Then a layer of wax (grease) was applied over the surface of the mould box to easily remove the composite board. Flamboyant pod particles and MWCNT were weighed as per the calculations. The epoxy resin was taken in the beaker and then mixed with flamboyant pod particles and MWCNT. It was placed in the sonicator for one hour for the uniform distribution of the particles and MWCNT in epoxy resin. After that, hardener was added and the mixture was poured to the mould box. Composite was allowed to cure for 24 hours at room temperature. Nine different composite were prepared.

### *B. Orthogonal array selection*

In this work, particle size, Particle weight fraction and MWCNT weight fraction are considered as the process parameters, which affect the mechanical and physical properties such as Modulus of rupture (MOR), Modulus of elasticity (MOE), Density and Moisture content of the FPP composite materials. Each process parameters were examined to study the non-linearity effect of parameters. The selected process parameter and their levels are given in the Table 2. In the present work, three parameters at three levels each, L9 orthogonal method [5] has been used to prepare nine FPP epoxy composite specimens. Table 3 represents experimental layout plan [15]. Table 4 represents the designation and composition of the composites.

**Table 2.** Process parameters and their levels [5]

| Code | Parameters | Levels | | |
|---|---|---|---|---|
| | | 1 | 2 | 3 |
| A | Particle size (µm) | 150 | 212 | 300 |
| B | Particle weight fraction (%) | 10 | 20 | 30 |
| C | MWCNT weight fraction (%) | 0.1 | 0.2 | 15 |

**Table 3.** Experimental Layout Plan [15]

| Trail no | Particle size (µm) | Particle weight fraction (%) | MWCNT Weight fraction (%) |
|---|---|---|---|
| 1 | 1 | 1 | 1 |
| 2 | 1 | 2 | 2 |
| 3 | 1 | 3 | 3 |
| 4 | 2 | 1 | 2 |
| 5 | 2 | 2 | 3 |
| 6 | 2 | 3 | 1 |
| 7 | 3 | 1 | 3 |
| 8 | 3 | 2 | 1 |
| 9 | 3 | 3 | 2 |

### *C. Marking and cutting of composite boards*

In order to prepare the specimen for the various mechanical tests, composite boards have been cut as per the ASTM standard for test specimens by using wire operated composite cutter.

**Table 4.** Designation and composition of composite

| | |
|---|---|
| FE1 | 10% particles(150µm) +0.1%MWCNT+90% epoxy |
| FE2 | 20% particles(150µm) +0.2%MWCNT+80% epoxy |
| FE3 | 30% particles(150µm) +0.3%MWCNT+70% epoxy |
| FE4 | 10% particles(212µm) +0.2%MWCNT+90% epoxy |
| FE5 | 20% particles(212µm) +0.3%MWCNT+80% epoxy |
| FE6 | 30% particles(212µm) +0.1%MWCNT+70% epoxy |
| FE7 | 10% particles(300µm) +0.3%MWCNT+90% epoxy |
| FE8 | 20% particles(300µm) +0.1%MWCNT+80% epoxy |
| FE9 | 30% particles(300µm) +0.2%MWCNT+70% epoxy |

### *D. Flexural Test (3-point bending).*

The flexural test was conducted to determine the flexural properties of the fabricated flamboyant pod particles reinforced epoxy composite specimens under the defined conditions. A Flexural test is carried out as per ASTM D790-91 i.e. specimen with dimensions 135 mm ×15 mm ×7 mm has been used. A three point bending arrangement has been selected to conduct the flexural test. In this test, a center loading is utilized on a simply supported beam. Measure and mark the span length (L) between the two supporting span. Place the specimen on the roller supports at center. Fix the dial gauge at the load point at top centrally. Apply the load at the center of the span at cross head speed of 0.25mm/min strain rate until failure of the specimen. Make simultaneous observations of load and deflection. Equation (1) is used to calculate Modulus of Rupture (MOR) or flexural strength of composites. Equation (2) is used to calculate Modulus of elasticity (MOE) or flexural modulus.

$$MOR = \frac{\quad}{\quad} \tag{1}$$

$$MOE = \frac{\quad}{\quad} \tag{2}$$

Where, $\sigma_f$; MOR in the bending, $E_B$; Modulus of elasticity in bending P; Applied load force in Newton, L; Length of specimen in mm, B; Width of specimen in mm, h; Thickness of the specimen, m; Slope of the tangent to the initial straight-line portion of the deflection curve.

### *E. Density test*

The width, length and thickness of each board will be measured in the manner specified in ASTM D792-91 mass will be determined to an accuracy ±0.2. The specimen should be cut to the specified size. Each test piece will be within all edge cut square to the surface. The dimensions of the specimen, that is length, width and thickness will be measured to an accuracy of 0.02mm. The specimen will be of the full thickness of the material and will be 75mm wide and 50mm long as specified in ASTM D792-91. Equation (3) is used to calculate the density of the composites.

$$\frac{\quad}{\quad} \tag{3}$$

Where, ρ;density of the specimen, m;mass of the specimen, l;length of the specimen, w;width of the specimen, t;thickness of the specimen.

*F. Moisture content test.*

The moisture content tests were performed according to IS: 2380 (PARTIII) standard. The test specimen of 75 mm 50 RR. and 10 mm thickness were prepared for moisture content test. Initially, each specimen was weighed and then the specimen was dried in ventilated oven at a temperature of 103° C until the mass became constant to +0.2 percent between two successive weighing made at an interval of 1 hour. The percent moisture content was calculated as the ratio of decrease in mass of the specimen to the initial mass and is given by Equation (4).

——— (4)

Where, $m_i$; initial mass, $m_f$; final mass.

*4. Analysis of data, results and discussion.*

Table 5 summarizes the experimental results of MOR, MOE, Density, and Moisture Content of flamboyant pod particles reinforced polymer composite materials. From table 5 it is clear that FE2 (with 20% particles (150µm) +0.2%MWCNT+80% epoxy) has maximum MOR of 59.7 6MPa and FE8 (with 20% particles (300µm) +0.1%MWCNT+80% epoxy) has maximum MOE of 5.206 GPa. MOR value is maximum for particle of 150µm then it decreased with increase in particle size similar trend was observed by Raju et.al [6]. Maximum MOR and MOE values are obtained for particle of weight 20% the results found out were similar [14].

**Table 5** Experimental results

| Specimen | MOR (Mpa) | MOE (MPa) | Density (Kg/m³) | Moisture content |
|---|---|---|---|---|
| FE1 | 45.57 | 4044.86 | 1122.7 | 0.235 |
| FE2 | 59.76 | 4003.84 | 1040.4 | 0.336 |
| FE3 | 50.12 | 2768.61 | 979.1 | 0.381 |
| FE4 | 45.22 | 4063.64 | 1101.42 | 0.296 |
| FE5 | 53.56 | 4040.86 | 1032.84 | 0.413 |
| FE6 | 44.31 | 3746.90 | 973.26 | 0.482 |
| FE7 | 43.18 | 3742.85 | 1088.72 | 0.381 |
| FE8 | 48.89 | 5206.23 | 1015.84 | 0.492 |
| FE9 | 49.20 | 3724.36 | 948.16 | 0.603 |

The increase in MOR and MOE is due to the dispersion of CNT and stronger interfacial bonding between the matrix and nanotubes in the composites. Reduction is due to the agglomeration of MWCNT fillers in the composites, formation of voids and porosity for higher loading of MWCNT. The maximum MOR of 59.7MPa is found for 0.2% MWCNT. The maximum MOE of 5.206GPa is found for 0.1% MWCNT. Similar observation has been reported by the researcher in the study on epoxy / glass fiber/MWCNT hybrid composites [16] and on carbon Nano fiber / epoxy composites

G. Results show that there was a drop in the value of bending modulus, because of their high aspect ratio and of Vander Waals striking interfaces. CNFs may twist and produce agglomeration at higher concentration thereby decreasing the bending property.

From Table 5 it is clear that density of the composite mainly depends upon the weight % of the particle. Minimum value of density was observed for FE9 with 30% particles (300µm) +0.2%MWCNT. Particle size has also contributed to some extent as the particle of size 150µm has maximum density than other two. Density of the composite has reduced with increase in particle weight %, it is mainly because density of particles is less than that of the epoxy. When two materials of different density in a composite are mixed, composite tends to attain in-between value of those two material's density [18].

Moisture content as a function of time was measured. It is observed that moisture content varied linearly with parameter B i.e. particle weight % moisture content increased with increase in the weight % of particles. FE1 shows the highest value of moisture content i.e. 0.235%.

*A. Analysis of Experimental Data Based on S/N Ratio*

In Taguchi robust design method, the S/N ratio has been calculated to determine the optimal parametric condition for each of the mechanical properties considered. In this work, to determine the optimal operating parameters larger the better type conditions has been used for MOR and MOE, in the other hand smaller the better type has been used for density and moisture content tests.

S/N Ratio For Larger the Better Type

[— ] (5)

S/N Ratio For smaller the Better Type

[ ] (6)

Where, n; Number of replication for each trial and y; Response

Table 6 presents the S/N ratio for each trial of L9 orthogonal array for various mechanical and physical properties of prepared composites.

**Table 6** Computed values of S/N ratios

| Specimen | MOR | MOE | Density | Moisture content |
|---|---|---|---|---|
| FE1 | 33.1736 | 72.1381 | -61.0053 | 12.5949 |
| FE2 | 35.5283 | 72.0495 | -60.3440 | 9.4611 |
| FE3 | 33.9997 | 68.8452 | -59.8165 | 8.3704 |
| FE4 | 33.1065 | 72.1783 | -60.8391 | 10.5604 |
| FE5 | 34.5762 | 72.1295 | -60.2807 | 7.6777 |
| FE6 | 32.9310 | 71.4734 | -59.7646 | 6.3471 |
| FE7 | 32.7066 | 71.4641 | -60.7383 | 8.3704 |
| FE8 | 33.7841 | 74.3305 | -60.1365 | 6.1685 |
| FE9 | 33.8393 | 71.4210 | -59.5376 | 4.3953 |

### *B. Analysis of Means and Analysis of Variance*

In Taguchi design, the data analysis comprises of analysis of means (ANOM) and analysis of variance (ANOVA). ANOM helps to determine the optimal factor combination. ANOM is the process of determining the direct effect of each variables and the effect of parameter level is the deviation causes from the overall mean response. The process parameter level for each S/N ratio is calculated by averaging the S/N ratio when the parameter is kept at that level. The importance of the parameters in terms of percentage contribution is ascertained by the ANOVA. It is also required to identify the error variance for the effects and variance for prediction error. This can be achieved by separating the total variability of S/N ratio. The parameter with a small variation with high percentage of contribution has huge control on the response.

The process parameters with the highest signal to noise ratio value are considered as the optimal level in the Taguchi design. As demonstrated in Fig 1 the optimum level of process parameter combination for maximizing the MOR of FPP reinforced epoxy composite is A1, B2 and C2 i.e. the specimen having a particle size of 150µm with 20% weight of particles and 0.2% of MWCNT. Similar procedure is followed for other properties to find the optimal level of process parameters from Fig 2, Fig 3 and Fig 4. Finally the comparative magnitude among the process parameters has to be investigated through the ANOVA.

**Fig. 1** Response graph of S/N ratio for MOR

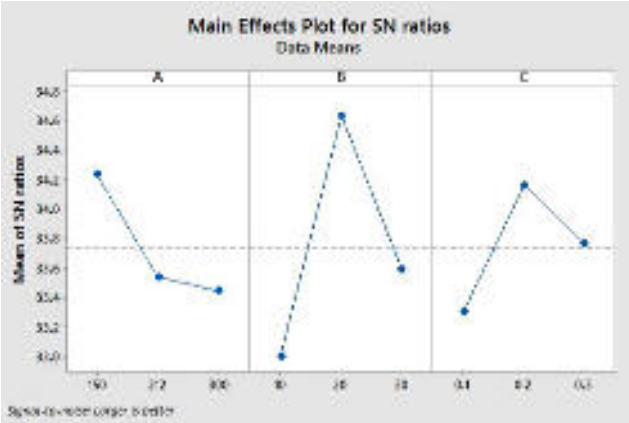


**Fig. 2** Response graph of S/N ratio for MOE

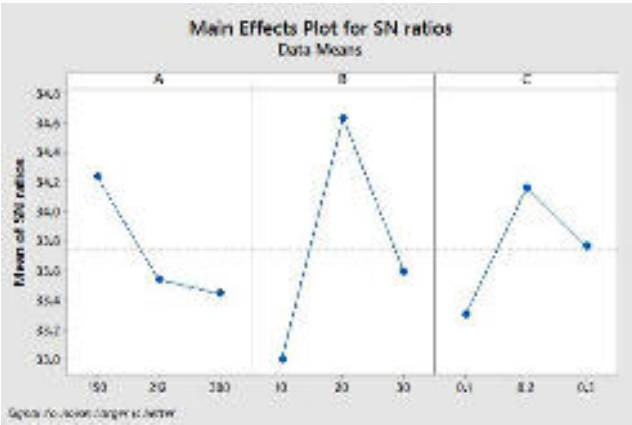


**Fig. 3** Response graph of S/N ratio for density.

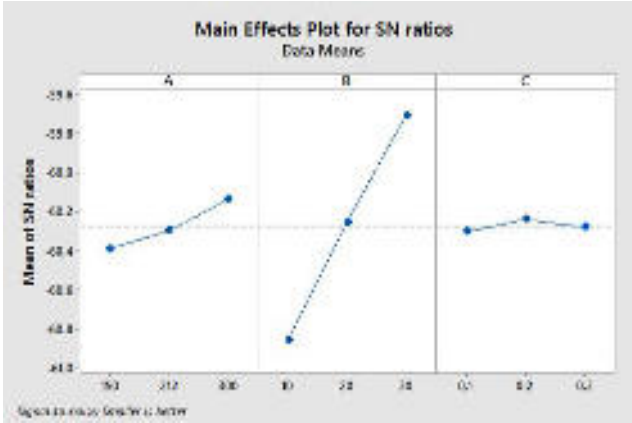


Table 7 to 10 describes the summary of ANOVA results for MOR, MOE, Density and Moisture respectively. From ANOVA we get to know that which parameter has more significance in changing the property of the composite and which parameter has less significance. For example from Table 7, it is that weight fraction of particle has the major contribution (63.91%) to increase the MOR of the fabricated FPP epoxy composite. Similarly by looking at the values we could get contribution of particular parameter on the particular property.

**Fig. 4** Response graph of S/N ratio for moisture content

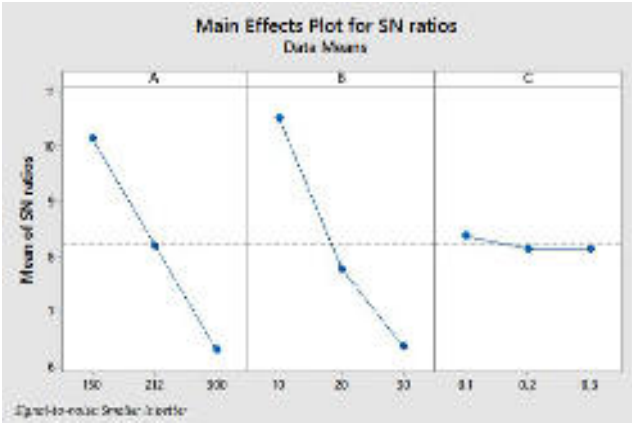


**Table 7** ANOVA for MOR

| ANOVA for MOR | | | | |
|---|---|---|---|---|
| **Source** | **DOF** | **Sum of squares** | **Mean square** | **Percentage of contribution** |
| A | 2 | 1.1182 | 0.5591 | 17.4162 |
| B | 2 | 4.1038 | 2.0519 | 63.9119 |
| C | 2 | 1.1163 | 0.5581 | 17.3854 |
| Error | 2 | 0.0826 | 0.0413 | 1.28644 |
| Total | 8 | 6.4210 | 3.2105 | 100 |

**Table 8** ANOVA for MOE

| ANOVA for MOE | | | | |
|---|---|---|---|---|
| **Source** | **DOF** | **sum of squares** | **Mean square** | **Percentage of contribution** |
| A | 2 | 3.0117 | 1.5058 | 18.9157 |
| B | 2 | 7.7338 | 3.8669 | 48.5736 |
| C | 2 | 5.0942 | 2.5471 | 31.9950 |
| Error | 2 | 0.0820 | 0.0410 | 0.5155 |
| Total | 8 | 15.9219 | 7.9609 | 100 |

**Table 9** ANOVA for density test

| ANOVA for density | | | | |
|---|---|---|---|---|
| **Source** | **DOF** | **sum of squares** | **Mean square** | **Percentage of contribution** |
| A | 2 | 0.0969 | 0.0484 | 4.6288 |
| B | 2 | 1.9914 | 0.9957 | 95.0344 |
| C | 2 | 0.0063 | 0.0031 | 0.3043 |
| Error | 2 | 0.0006 | 0.0003 | 0.0322 |
| Total | 8 | 2.0955 | 1.0477 | 100 |

**Table 10** ANOVA for Moisture Content

| ANOVA for Moisture Content | | | | |
|---|---|---|---|---|
| **Source** | **DOF** | **sum of squares** | **Mean square** | **Percentage of contribution** |
| A | 2 | 22.0138 | 11.0069 | 45.07155 |
| B | 2 | 26.5799 | 13.2899 | 54.42032 |
| C | 2 | 0.10667 | 0.05333 | 0.218413 |
| Error | 2 | 0.1414 | 0.0707 | 0.289701 |
| Total | 8 | 48.841 | 24.4209 | 100 |

### *C. Verification of experiments.*

Data analysis using ANOM has been identifies the optimal level of process parameters for each of the mechanical properties. The next step is to predict and verify the performance characteristic using the optimal level of design parameters. S/N ratio ($\eta_{opt}$) of the response for the predicted optimal value is determined by the formula

$$\Sigma \cdot ( \quad ) \quad + \tag{7}$$

Where, m; Overall mean of S/N ratio, $(m_{ij})_{max}$; S/N ratio of optimum level i of factor j, ki; number of main design parameters that affect the response

In order to determine the closeness of observed value of S/N ratio ($\eta_{obs}$) with that of the predicted value ($\eta_{opt}$), error variance ($\sigma e$) calculate by using formula

$$\text{Error} | = | \eta_{opt} - \eta_{obs} | \tag{8}$$

$$\text{Error of Predicted value} = | \eta opt - \eta obs | \leq 2\ SD$$

K.

echanical properties such as MOR, MOE and physical properties such as density and moisture content of flamboyant pod particles(FPP) reinforced Epoxy

If Error of predicted value is less than the standard deviation error, then combination of optimum level process parameters and additive model for the variables are valid. In present study, four validation experiments were conducted at optimal levels of process parameters for two of the mechanical properties and two of the physical properties. The results of verification tests are presented in Table 11.

**Table 11** Results of the verification tests

| Measure of performance | MOR | MOE | Density | Moisture Content |
|---|---|---|---|---|
| Levels (A,B,C) | 1,2,2 | 3,2,1 | 3,2,2 | 1,1,1 |
| S/N predicted ($\eta_{opt}$), dB | 35.5447 | 74.3268 | 59.536 | 12.5884 |
| S/N observed ($\eta_{obs}$), dB | 35.5283 | 74.3304 | 59.537 | 12.5949 |
| Prediction error, dB | 0.01638 | 0.00360 | 0.0000 | 0.0064 |
| 2SD confidence Interval, dB | 0.02753 | 0.02736 | 0.0002 | 0.04717 |
| Model is adequate | Yes | Yes | Yes | Yes |

It is observed that the calculated value of prediction error of each of the mechanical and physical properties is within the confidence limit, thus clearly indicating the adequacy of the additivity of mechanical property models. The best combinations of process parameters for achieving maximum flexural strength, modulus of elasticity, minimum density and minimum moisture content value along with the corresponding optimal values of mechanical properties are shown in Table 12.

**Table 12.** Best combination values of the process parametersand the corresponding optimal values

| Property | Particle Size(μm) | Particle weigth (%) | MWCNT weight (%) | Optimal Value |
|---|---|---|---|---|
| MOR (MPa) | 150 | 20 | 0.2 | 59.76 |
| MOE (MPa) | 300 | 20 | 0.1 | 5206.23 |
| Density ($Kg/m^3$) | 150 | 20 | 0.2 | 948.16 |
| Moisture Content | 150 | 10 | 0.1 | 0.23 % |

### *5. Conclusion*

The main aim of this present work is not only to determine the mechanical properties of fabricated composites but also to establish the significance influence of three parameters such as particle size, particle weight fraction and MWCNT weight fraction to dictate mechanical properties. The study highlights the application of Taguchi methodology to determine the best combination of process parameters for optimizing th composites. The composite specimens were prepared with NaOH treated pod's particles of different size with different weight fraction by using MWCNT as secondary reinforcement material and epoxy resin as matrix material. The experiments were conducted as per Taguchi L9

orthogonal array method with particle size, particle weight fraction and MWCNT weight fraction as the process parameters. The optimal conditions were determined using ANOM and the contribution of each process parameter in controlling the mechanical properties were identified by ANOVA. From the analysis of results using S/N ratio and ANOVA, the following conclusions are drawn:

ANOVA results concluded that weight fraction of FPP and particle size is more dominant factors to improve the mechanical properties of FPP composites. The ANOM results point out that the combination of particle size (150 µm) with FPP weight fraction of 20% and MWCNT weight fraction of 0.2% beneficial for maximizing the MOR. The combination of particle size (300 µm) with FPP weight fraction of 20% and MWCNT weight fraction of 0.1% beneficial for maximizing MOE. The parameter level A3 B3 C2 for density and A1 B1 C1 for moisture content were found to beneficial for improving the mechanical and physical properties of the material. The ANOVA results revealed that the weight fraction of filler material has major contribution to maximize the MOR and MOE. Weight fraction of particle has major significance on properties like density and moisture content. The results of ANOM and ANOVA identifies that the additive models are adequate for determining the optimum mechanical properties.

References


[1] H. Ku, H. Wang, N. Pattarachaiyakoop, M. Trada "A review on the tensile properties of natural fiber reinforced polymer composites" Part B 42 (2011) 856–873

[2] Rahul Shrivastavaa, Amit Telangb, R. S Ranac and Rajesh Purohitd. "Mechanical Properties of Coir/ G Lass Fiber Epoxy Resin Hybrid Composite". 5th International Conference of Materials Processing and Characterization. 4 (2017) 3477–3483.

[3] Ugochukwu Chuka Okonkwo1, Christian Ebele Chukwunyelu, Bright Uchenna Oweziem, Austine Ekuase. "Evaluation and Optimization of Tensile Strength Responses of coir fibre Reinforced Polyester Matrix Composites (CFRP) Using Taguchi Robust Design". Journal of Minerals and Materials Characterization and Engineering. 3 (2015) 225-236.

[4] Gopinath, K. Senthil Vadivu. "Mechanical Behavior of Alkali Treated Coir Fiber and Rice Husk Reinforced Epoxy Composites". International Journal of Innovative Research in Science, Engineering and Technology. Volume 3 (2014) ISSN: 2319 – 8753.

[5] G. U. Raju, V. N. Gaitonde, S. Kumarappa. "Experimental Study on Optimization of Thermal Properties Of Groundnut Shell Particle Reinforced Polymer Composites". Int. J. Emerg. Sci. 2(3) (2012) 433-454. ISSN: 2222-4254

[6] G.U. Raju and S. Kumarappa "Experimental study on mechanical properties of groundnut shell particle reinforced epoxy composites". J. Mater. Environ. Sci. 3 (5) (2012) 907-916. ISSN : 2028-250

[7] Kiran R. Garadimani, G. U. Raju, K. G. Kodancha "Study on Mechanical Properties of Corn Cob Particle and E-GlassFiber Reinforced Hybrid Polymer Composites" American Journal of Materials Science. 5(3C) (2015) 86-91.J.H. Lee, K.Y. Rhee, S.J. Park, 15 October 2010, "The tensile and thermal properties of modifiedCNT-reinforcedbasalt/epoxyComposites",MaterialsSciencean dEngineering, Volume 527, Pages 6838–6843.

[8] H. B. Jalageri , G. U. Raju, K. G. Kodancha "ExperimentalInvestigationsonMechanicalPropertiesof Cenosphere/MWCNT Reinforced Polymer Nanocomposites"

[9] American Journal of Materials Science5(3C) (2015): 101-106.

[10] Metin Sayer , Numan B. Bektas, Onur Sayman "An experimental investigation on the impact behavior of hybrid composite plates" Composite Structures 92 (2010) 1256–1262.

[11] G.U. Raju and S. Kumarappa "Experimental study on mechanical properties of groundnut shell particle reinforced epoxy composites". J. Mater. Environ. Sci. 3 (5) (2012) 907-916. ISSN : 2028-2508

[12] Phadke. MS, "Quality Engineering using Robust Design",Prentice Hall, Englewood Cliffs, New Jersey, 1989.

[13] Ross. PJ, "Taguchi Techniques for Quality Engineering", McGraw-Hill, New York, 1996.

[14] G. U. Raju , S. Kumarappa , V. N. Gaitonde "Mechanical and physical characterization of agricultural waste reinforced polymer composites" J. Mater. Environ. Sci. 3 (5) (2012) 907-916. ISSN : 2028-2508 CODEN: JMESCN

[15] Madhav s padake. "Text book of Quality engineering using robust design".

[16] NH MohdZulfli, A Abu Bakar and WS Chow, 2013 "Mechanical and water absorption behaviors of carbon nanotube reinforced epoxy/glass fiber laminates", Journal ofReinforced Plastic and Composites, Volume 32(22), Pages 1715–1721.

[17] Smrutisikha Bal, May 2010, "Experimental study of mechanical and electrical properties of carbon nanofiber/ epoxy composites", material and design, Volume 31, Pages2406–2413.

[18] Autar K. Kaw. "Text book of mechanics of composite materials. Second edition"


**M176**

# Study of Different Types of Conveyor System And Their Use According To The Various Needs of Different Industries

Abhijeet K Baji, PG student
Utkarsh Patil, PG student
Department of Mechanical Engineering
D.K.T.E. Society of Textile and Engineering Institute
Ichalkaranji, India.
abhijeet.baji99@gmail.com

Prof.(Dr) V. R. Nike, HOD
Department of Mechanical Engineering D.K.T.E.
Society of Textile and Engineering Institute
Ichalkaranji, India.

***Abstract* –Conveyor is one of the best material handlingequipment used for transport material from one point to another. Conveyors are especially useful in application involving the transportation of heavy or bulky material. Conveyor system allows quick and efficient transportation of wide verity of materials, which make them very popular in material handling and packaging industry. This paper represents study of various types of conveyor system. Many kind of conveying system are available and used according to various needs of different industries are described in this paper. Chain conveyor, roller conveyor, slat conveyor, gravity conveyor, belt conveyor, overhead conveyors are described in this paper commonly used in many industries for various purpose and application.**

*Keywords— conveyor; application; industries; material handling; types.*

## 4. INTRODUCTION

A conveyor system is a common piece of mechanical handling equipment that moves materials from one location to another. Conveyors are especially useful in applications involving the transportation of heavy or bulky materials. Conveyor are mainly consisting of one or more endless chain on which slat, roller or belt are attached to form moving support of object being conveyed. They are driven by motor or gravitation energy. Fig. 1.1 shows general layout of conveyor system used in the industries. Many kind of conveying system are available and used according to various needs of different industries. Chain conveyor, roller conveyor, slat conveyor, gravity conveyor, belt conveyor, overhead conveyors commonly used in many industries including mining, automotive, agriculture, computer, processing, food, electronic, aerospace etc. for various purpose and application.

## II. TYPES OF CONVEYOR SYSTEM

Many kinds of conveying systems are available and are used according to the various needs of different industries. Various types of conveyor are listed as,

- Gravity conveyor
- Belt conveyor
- Slat conveyor
- Pneumatic Conveyor
- Roller Conveyor
- Overhead Conveyor
- Screw conveyor

### H. GRAVITY CONVEYOR

Gravity conveyors, as stated earlier, use gravity to move objects from one place to another. These conveyors do not use any other force to move the object down the line except for the force that is already on the object when it enters the conveyor, such as the force the worker puts on the object when it is pushed onto the conveyor.

#### Gravity Roller conveyor

Roller conveyors use cylinders on axles to move products down the line. The rollers and axles are have very low friction so that it takes very little gravitational force to make the rollers rotate. These conveyors are ideal for heavy-duty loads and are more suited for flat-bottomed objects. Roller conveyors are more expensive and require more maintenance than chutes but are still less expensive than powered conveyors due to their use of gravity. Also, roller conveyors force the product to keep its initial orientation when it enters the conveyor all the way to where it exits the conveyor. These are used in the industries where transportation of light load from top side to bottom side is required.

L. Belt Conveyor

A belt conveyor system is one of many types of conveyorsystems. A belt conveyor system consists of two or more pulleys (sometimes referred to as drums), with an endless loop of carrying medium—the conveyor belt—that rotates about them. One or both of the pulleys are powered, moving the belt and the material on the belt forward. The powered pulley is called the drive pulley while the unpowered pulley is called the idler pulley. There are two main industrial classes of belt conveyors; Those in general material handling such as those moving boxes along inside a factory and bulk material handling such as those used to transport large volumes of resources and agricultural materials, such as grain, salt, coal, ore, sand, overburden and more.

Belt conveyors are used material handling applications such as food services, baggage handling, packaging, scrap handling, and postal service, among many others. Various belt materials are available including metals and non-metals depending on the application requirements. Belt conveyors are typically powered and can be operated at various speeds depending on the throughput required. The conveyors can be operated horizontally or can be inclined as well.

Structural diagram

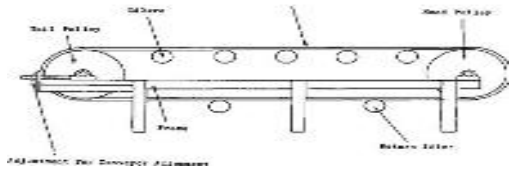

The structural diagram of the belt conveyor is show in the above fig. belt conveyor consisting of drive pulley, ideal pulley and belt. It is driven by belt pulley mechanism powered by electric motor.

- Slat conveyor

Slat Conveyors are material handling systems that use steel, wood, or other materials typically mounted on roller chains to convey product. Key specifications include the intended application, configuration, load capacity, slat width and overall conveyor length, along with electrical specifications as required. Apron/slat conveyors are used primarily in material handling applications for moving large, heavy objects including crates, drums, or pallets in heavy-industry settings such as foundries and steel mills. The slats allow for heavy duty use with less wear and tear. These conveyor systems are usually powered and come in many sizes and load capacities.

Structural diagram

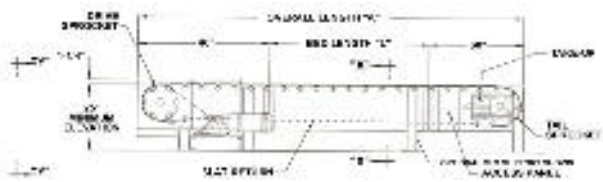

Mostly slat conveyors are used for assembly line of vehicle. Slat conveyor is a conveyor consisting of one or more endless chain to which horizontal slat is attached to form a moving support for object being conveyed. They are suitable for application Vehicle assembly lines, Car shower leakage testing lines, Inspection lines, White goods assembly lines, Carton box handling, Hot metal handling and various sub-assembly lines. They are consist of slats attached on endless chain drive shaft assembly consist of sprocket, transmission shaft which is driven by the motor and give required power to the chain and drive the conveyor as show in fig. Take up assembly at another side consist of component sprocket and take up shaft provide required tension to the chain.

*I. Pneumatic/Vacuum Conveyor*

Pneumatic / Vacuum Conveyors are material handling systems that use air pressure or vacuum to transport materials or items in or through closed tubes or ducts or along surfaces. Key specifications include the intended application, conveyor type or configuration, and working pressure, as well as the power requirements. Pneumatic/vacuum conveyors are used primarily in materials handling applications such as dust collection, paper handling, ticket delivery, etc. and in processes such as chemical, mineral, scrap, and food. Materials for the conveyors can be metallic or non-metallic depending on the media being conveyed. Various sizes are available depending on the load and throughput requirements.

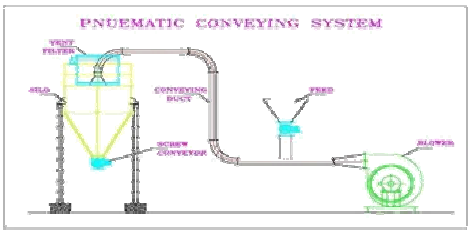


A conventional mechanical conveying system runs in a straight line, with minimal directional changes, and each directional change typically requires its own motor and drive. The mechanical conveying system may be open rather than enclosed, potentially generating dust. It also has relative large number of moving parts, which usually required frequent maintenance. Fig shows a pneumatic conveying system it uses a simple, small diameter pipeline to transfer material. The pipeline can be arranged with bends to fit around existing equipment, giving the system more layout flexibility and the system also has a relatively small footprint. The system is totally enclosed and typically has few moving parts as it is electronically managed.

[17] Roller Conveyor

Roller Conveyors are material handling systems that use rollers mounted in frames to convey product either by gravity or manually. Key specifications include the load capacity, roller diameter, and axle centre dimensions, along with the conveyor overall length and width as required. Roller Conveyors are used primarily in material handling applications such as on loading docks, for baggage handling, or on assembly lines among many others. The rollers are not powered and use gravity, if inclined, to move the product, or manually if mounted horizontally. The conveyors can be straight or curved depending on the application and available floor space.

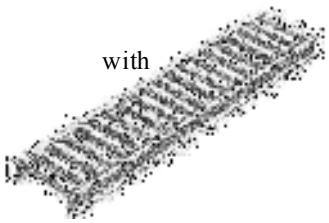

- Overhead Conveyor

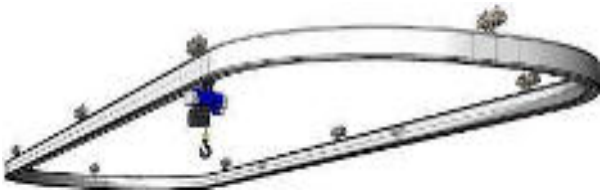

Overhead Conveyors are material handling systems mounted from ceilings that use trolleys or carriers moved by chains, cables, or similar connections as show in fig. Key specifications include the intended application, conveyor type and configuration, control type, and load capacity, as well as the required electrical specifications. Overhead conveyors are used primarily in material handling applications where the product needs to be hung such as dry-cleaning garment lines, paint lines, or parts handling systems, of for cooling and curing. Various configurations are available including electric track, monorail, trolley, as well as inclined or ramped. Depending on the application, the load carrying capacity may be critical. Most overhead conveyors systems are powered and controlled, while others are hand operated. They are used for foundry application also.

- Screw Conveyor

Screw Conveyors are material handling systems that use helical elements to convey products. Key specifications include the conveyor type and configuration, load capacity,throughput, and length,as well as the required electrical requirements. Screw conveyors are used primarily in material handling applications including food handling, concrete, and chemicals, amongconveyors can also convey various mechanical parts. A typical use may be for bottling applications to convey the bottles discretely. The screw can be of a paddle or ribbon design depending on the application and can be driven via a chain and sprocket, gears, or direct drive. Materials can be metal or nonmetal depending on the media being conveyed.

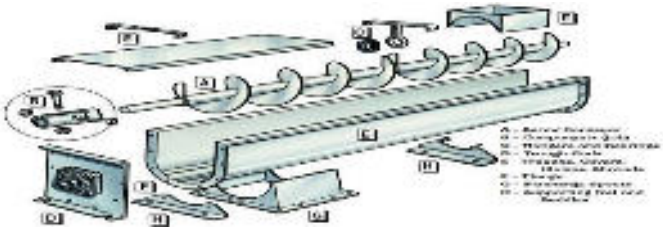

The exploded view of screw conveyor is shown in fig. they consist of long screw motor is mounted at one end. They are most suitable for short distance. They also used to transport coal in coal mines.

- Chain Conveyor

Chain Conveyors are material handling systems that use mechanical devices attached to moving members, usually chains or cables, to drag or tow products. Key specifications include the intended application, conveyor type and configuration, load capacity, and power rating, as well as other electrical requirements. Chain conveyors are used primarily inmaterial handling applications to drag or tow various products in different manners. Chain conveyors are used for product being attached to, and conveyed directly by, the chain and used for moving pallets or other hard-to-convey products. Tow conveyors use cables or chains, usually in the floor or just above it, to tow product directly or to tow wheeled carts or dollies. Drag conveyors are used to convey bulk materials in bins, flights, or other attachments and can have multiple discharge or loading points. Tubular drag conveyors are able to convey product in any direction.

## Conclusion

The all above conveyor described in this paper are very efficient and wildly used in the industries for various purposes to transfer heavy or bulk material from one point to another point. Many factors are important in the accurate selection ofa conveyor system. It is important to know how the conveyor system will be used beforehand. Some individual areas that are helpful to consider are the required conveyor operations, such as transportation, accumulation and sorting, the material sizes, weights and shapes and where the loading and pickup points need to be.Slat and overhead conveyors are suitable forthe transportation of heavy and large size component hence they are mostly used in automobile, aerospace industries and for foundry application also. Roller and belt conveyor are very popular in packaging, electronic, food processing, bottling and canning, computer, pharmaceutical industries. In mining industries for transportation of coal screw conveyor is suitable.

## Reference


1) David W. Shaw, “slat conveyor,” Alfa level cheese system, vol.12, ISSNo.13027-1867, sept 1988, pp.1-10.
2) Pradnyaratna A. Meshram, Dr. A R Sahu P.G Student,“Design modeling analysis of conveyor system used for transportation of carton,” International journal in research in advent technology, vol.4, E-ISSN: 2321-9637, April 2016, pp.45-55.
3) Daniel J. Fonseca, Timothy J. Greene, “The knowledge based system for conveyor equipment selection,” ExpertSystems with Applications, vol.26, ISSN NO.1522, May2004 pp.615–623.
4) A.J.Kadam, Prof S V Deshpande, “Design and development of conveyor chain outer link by composite material.,” Noveture publication, IJIERT, vol.2, issue 12,ISSN:2393-3696, June 2014, pp.213-221.
5) Mr Dinesh S. Borse, Prof. Avinash V Patil, “Optimization of chain link of material handling system from FEA andExpiremental aspect”, IJEART, volume-3, Issue-7, ISSN: 2454-9290, Jan 2017,pp.

**M177**

# A Numerical Analysis of Constraint Effects using Stress Triaxiality as a Parameter on SENB Specimen

Sanjeev M. Kavale
School of Mechanical Engineering
KLE Technological University
Hubballi-580 031, Karnataka
sanjeev_kavale@bvb.edu

Nagaraj Ekbote
Department of Automobile Engineering
BVB College of Engineering and Technology
Hubballi-580 031, Karnataka
nagaraj_ekbote@bvb.edu

Krishnaraja G. Kodancha
School of Mechanical Engineering
KLE Technological University
Hubballi-580 031, Karnataka
krishnaraja@bvb.edu

***Abstract*— Constraint at a crack-tip/crack-front is the resistance against plastic deformation, which is induced by specimen geometry and loading conditions. The amount of constraint at the crack tip describes the fracture behavior of a material. The stress intensity factor ($K_I$) is the widely used parameter to study fracture at the crack tip. The constraint effect on the surface is referred as in-plane constraint and through the thickness as out-of- plane constraint. The level of crack-tip triaxiality is measured by triaxiality factor (*h*). In this investigation, three dimensional FE analyses on SENB specimen are performed with various crack length (*a*) to width of the specimen (*W*) ratio and specimen thicknesses (*B*). The variation of the Stress Intensity Factor and Stress Triaxiality is studied with respect to *a/W* ratio and specimen thicknesses. The results indicate that magnitudes of $K_I$ and h are dependent on specimen thickness. $K_I$and h, both are different for in plane and out of plane conditions, despite of specimen thickness and *a/W* ratio. Because of higher constraint at the centre, the material at the center fails earlier than that of the material at the surface.**

*Keywords—Stress intensity factor, Finite element method, Constraint, Stress triaxiality*

## INTRODUCTION

Constraint at a crack-tip/crack-front is the resistance against plastic deformation, which is induced by specimen geometry and loading conditions [1]. Large scale deformations at crack-tips thus necessitate modification of the single parameter description of the stress field, and such attempts are referred to belonging to the domain of constraint issue. The major effect of constraint loss is a varied fracture toughness of the material due to specimen geometry, specimen size and the loading conditions [2]. She and Guo [3] have argued that the variable fracture toughness is inconvenient in the engineering applications if the 3D out-of-plane stress level is not considered accurately. So, there exists a gap in understanding constraint effects in different state of stress and 3D cracks. The 3D triaxial stress field near the crack-front has an important role in a fracture mechanics framework [4, 5, 6]. The existing triaxial constraint effects are due to the in-plane and out-of-plane condition and both are related to the geometry and loading configuration of the cracked structure [7]. Stress Intensity Factor ($K_I$), J-integral, Energy Release Rate (*G*) and Crack-Tip Opening Displacement (*CTOD*) are the key parameters used in fracture mechanics. Stress intensity factor was proposed by Irwin [8] to describe the intensity of elastic crack-tip fields under linear elastic fracture mechanics regime. $K_I$ is used to characterize a crack by indicating the level of stresses in the crack tip region and predicting the shape and size of the plastic zone (*PZS*). In the present investigation, an attempt has been made to study the variation of Stress Triaxiality (*h*) and $K_I$

along the crack-front considering a SENB specimen geometry having varied thickness and crack length to width ratio (*a/W*) by detailed 3D finite element analysis.

## FINITE ELEMENT ANLYSES

In this work IF steel is considered for the analyses. The Young's Modulus of the material considered is 197000 MPa, yield strength is 155 MPa and Poisson's ratio being 0.30. The dimensions of the SENB specimen are taken as width (*W*) = 25.4mm (1 inch), height (*H*) = 2W = 50.8mm and the crack length varies as *a/W* varies from 0.45 to 0.65 in steps of 0.05. The geometric dimensions of the specimen are taken according to ASTM E1820-16 [9], Standard Test Method for Measurement of Fracture Toughness.

A series of 2D and 3D FE analysis have been conducted to study the variation of Stress Intensity Factor on SENB Specimen using ABAQUS 6.14 [10]. Guian et al [11] have concluded that the *J* integral method and interaction integral given by ABAQUS provide consistent magnitudes of Stress Intensity Factor (SIF) when compared with the ASTM standards and thus are the most appropriate methods to determine accurate *K* values for both 2D and 3D. Computations were carried out considering only one half of the specimen geometry due to symmetry. The 3D analysis domain is discretized using 20 node quadratic brick finite elements (C3D20R) using reduced integration. This kind of element is used by other investigators [12], for 3D analyses.

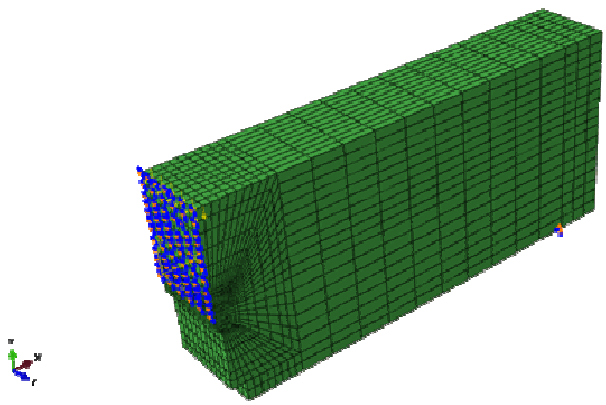

Fig. 1. 3D meshed model along with the boundary conditions

The model is generated by taking the origin at the crack tip and the fine mesh is used in the region around the crack front to achieve better results. The meshed model along with the boundary conditions are shown in the Fig. 1. The number of elements in the mesh ranged from 6980 to 7800 and number of nodes ranged from 31603 to 35225 for various *a/W* ratio and specimen thickness. The symmetrical boundary conditions have been imposed along the ligament of the specimen due to half symmetry of the model. Another boundary condition is applied where the specimen sits on the roller while actual testing. The corresponding nodes are given displacement boundary conditions of $U_y = U_z = U_{Rx} = U_{Ry} = 0$. In this study, for SENB specimen a varied crack length to width ratio of *a/W* = 0.45 to 0.65 were considered for analyses.

3D linear elastic FE analyses have been conducted on the SENB specimen of thickness 3mm, 5mm, 10mm, 12.7mm, 15mm and 25.4mm with *a/W* of 0.45 to 0.65 in steps of 0.05. The SIF is extracted for various cases by using *J* based method built in ABAQUS directly from the software. This is based on the integration integral method in which stress intensity factors are directly obtained [13].

The magnitude of the applied stress σ is calculated using the below relation.

$$\sigma = \frac{3PS}{2B(W)^2} \quad (1)$$

Where *P* is the applied load, *S=4W*, is the span of the specimen, *B* is the specimen thickness, which is considered as 1mm for 2D analysis. For 3D analysis the *B* value is varied between 3mm and 25.4mm

## RESULTS AND DISCUSSIONS

In the present work, the variation of $K_I$ and h along the crack-front for various thicknesses and *a/W* ratios are studied for 2D and 3D conditions.

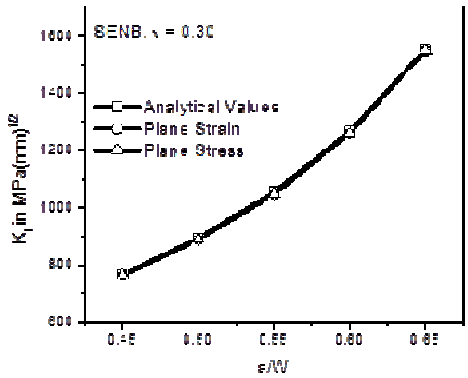


Fig. 2. Variation of 2D $K_I$ magnitudes for various a/W ratios

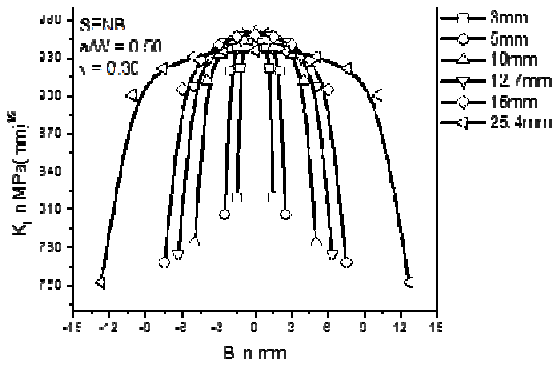


Fig. 3. Variation of $K_I$ along the crack-front for various specimen thickness.

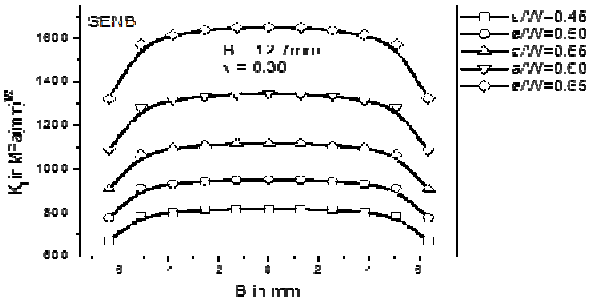


Fig. 4. Variation of $K_I$ along the crack-front for various a/W and specimen thickness B=12.7mm

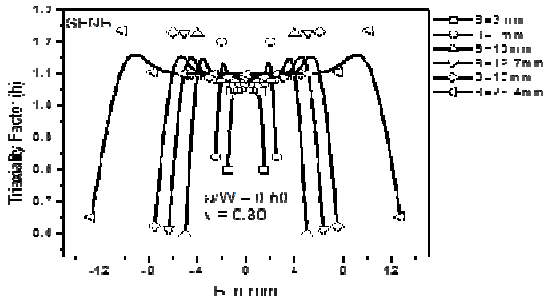


Fig. 5. Variation of Triaxiality Factor (h) along the crack for a/W=0.50 and different specimen thicknesses

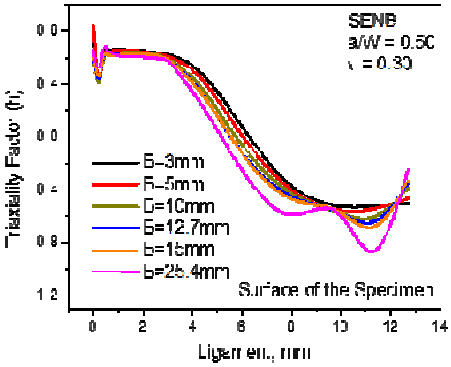


Fig. 6. Variation of Stress Triaxiality along the ligament for a/W=0.50 and different specimen thicknesses for in plane conditions.

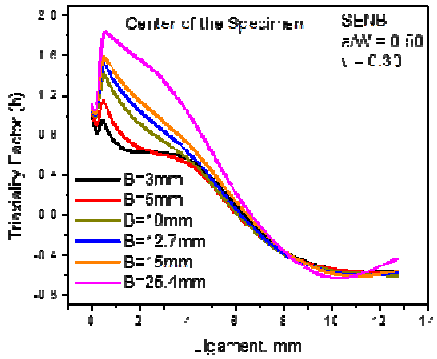


Fig. 7. Variation of Stress Triaxiality along the ligament for a/W=0.50 and different specimen thicknesses for out of plane conditions.

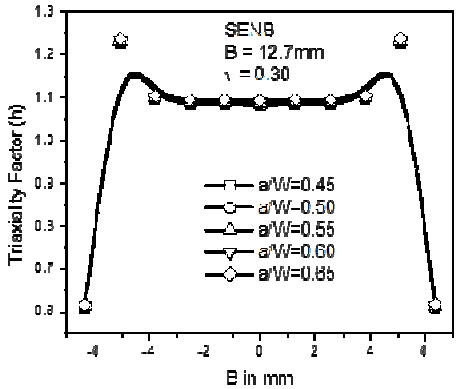


Fig. 8. Variation of Triaxiality Factor along the crack for B=12.7mm and different a/W ratios

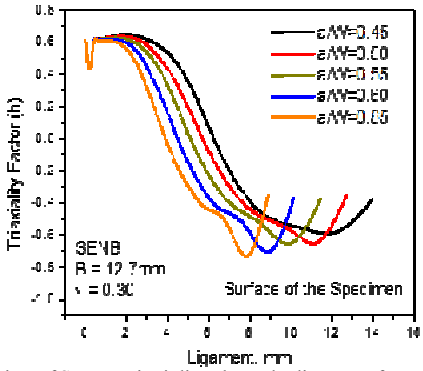


Fig. 9. Variation of Stress Triaxiality along the ligament for B=12.7mmand different a/W ratios for in plane conditions.

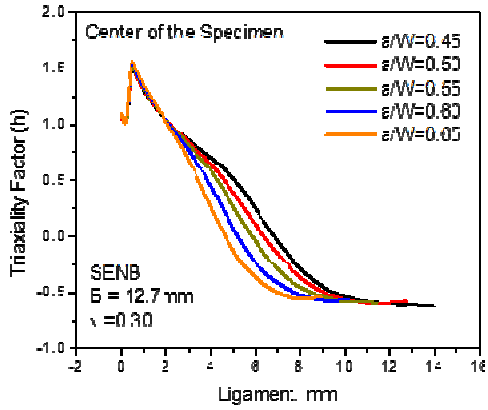


Fig. 10. Variation of Stress Triaxiality along the ligament for B=12.7mmand different a/W ratios for out of plane conditions.

The magnitudes of Stress Intensity Factor obtained for 2D analyses are validated with the analytical values available in literature [14]. 2D $K_I$ magnitudes for various *a/W* ratios under plane strain and plane stress conditions with analytical values are indicated in Fig. 2.

A typical variation of $K_I$ for different thickness with *a/W*=0.50 in 3D conditions is shown in Fig. 3. Fig. 3 demonstrates that $K_I$ varies with the thickness of the specimen. It is found that the magnitude of $K_I$ is higher at the center of the specimen than on the surface. Due to higher out of plane

constraint the material at the center of the specimen thickness fails earlier than that on the surface. The magnitude of $K_I$ increases as the thickness decreases as expected. The variation of $K_I$ for various *a/W* are also studied. The constraint also depends on the *a/W* ratio of the specimens and this may be due to stress triaxiality [15]. A typical variation of $K_I$ for various *a/W* ratios with thickness, *B*=12.7mm and $\nu$=0.30 is shown in Fig. 4.

The results infer that the specimen with higher *a/W* ratio experiences highest crack-tip constraint. Fig. 4 illustrates that the nature of variation of $K_I$ along the crack-front is almost similar for various *a/W* ratios. However the crack-tip constraint increases as *a/W* increases. The difference between the magnitude of $K_I$ at the center and surface increases as the *a/W* increases, which indicates that the specimen experience high crack-tip constraint as *a/W* increases. At this stage it is difficult to interpret such behavior. It maybe because of variation of stress triaxiality [15]. Kodancha and Kudari [15], have investigated on the variation of stress triaxiality along the crack plane and along the ligament for in plane and out of plane conditions for CT specimen. Authors have observed that triaxiality factor (*h*) is dependent on thickness of the specimen. A similar kind of observation is made in the current study also. The details about the extraction of stress triaxiality factor from the FE analyses are explained in detail by Kodancha and Kudari [15]. Fig. 5 indicates the variation of Stress Triaxiality Factor for *a/W*=0.50and various thicknesses of the specimen. Fig. 6 and Fig. 7 indicate the variation of Stress Triaxiality Factor along the ligament for in plane and out of plane conditions for *a/W*=0.50and various thicknesses of the specimen.

It can be observed from Fig. 5 that the Triaxiality Factor is changing along the crack across the thickness and is dependent on the specimen thickness. Same is true along the ligament for in plane and out of plane conditions, and is also dependent on specimen thickness. Fig. 8 shows the variation of Stress Triaxiality Factor along the crack for *B*=12.7mm and various *a/W* ratios. Fig. 9 and Fig. 10 show the variation along the ligament for in plane and out of plane conditions. From figures 8, 9 and 10, it can be observed that Triaxiality Factor is almost independent of *a/W* ratios along the crack and along the ligament. Thus Structural Integrity Assessment can be improved by providing triaxiality factor along with SIF.

## CONCLUSIONS

The major conclusions derived out of this investigation are:

- The magnitude of $K_I$ and *h* varies along the crack-front and the variation depends on the specimen thickness and *a/W*ratio of the specimen.
- The difference between the magnitude of $K_I$ at the center and surface increases as the *a/W*increases, however negligible difference is observed for *h*.
- The magnitude of *h* on the ligament for in plane and out of plane conditions varies with the specimen thickness.
- Due to higher out of plane constraint the material at the center of the specimen thickness fails earlier than that on the surface.

## REFERENCES


[1]. Y. Kim, X. K. Zhu and Y. J. Chao, "Quantification of constraint on elastic–plastic 3D crack front by the J–A2 three-term solution," Engineering Fracture Mechanics, vol. 68, pp. 895–914, 2001.

[2]. Y. J. Chao, S. Liu and B. J. Broviak, "Brittle fracture variation of fracture toughness with constraint and crack curving under mode I conditions," Experimental Mechanics, vol. 43, pp. 232-241, 2001.

[3]. C. She and W. Guo, "The out-of-plane constraint of mixed-mode cracks in thin elastic plates," International Journal of Solids and Structures, vol. 44, pp. 3021-3024, 2007.

[4]. T. Nakamura and D. M. Parks , "Three dimensional stress fields near crack front of a thin elastic plate," Journal of Applied Mechanics, vol. 55, pp. 805-813, 1988.

[5]. W. Guo, "Three dimensional analysis of plastic constraint for through thickness cracked bodies," Engineering Fracture Mechanics, vol. 62, pp. 383-407, 1999.

[6]. J. P. Petti and R. H. Dodd Jr, "Constraint comparisons for common fracture specimens: C(T)s and SE(B)s," Engineering Fracture Mechanics, vol. 71, pp. 2677-2683, 2004.

[7]. V. F. Gonzalez-Albuixech, E. Giner, J. Fernandez-Saez and A. Fernandez-Canteli, "Influence of the T33-Stress on the 3D stress statearound corner cracksin an elastic plate," Engineering Fracture Mechanics, vol. 78, pp. 412-427, 2011.

[8]. G. R. Irwin, "Analysis of Stresses and Strains near the End of a Crack Traversing a Plate," Journal of Applied Mechanics, vol. 24, pp. 361–364, 1957.

[9]. "ASTME1820-16," Standard Test Method for Measurement of Fracture Toughness," American Society of Testing and Materials, Philadelphia, United States, 2013.

[10]. ABAQUS User's Manual. Version 6.14, Getting Started With Abaqus: Interactive Addition, 2014.

[11]. Q. Guian, V. F. González-Albuixech, M. Niffenegger and E. Giner, "Comparison of KI calculation methods," Engineering Fracture Mechanics, vol. 156, pp. 52–67, 2016.

[12]. Y. Kim and B. Son, "Elastic-plastic Finite Element Analysis for Double-Edge Cracked Tension (DE (T)) Plates," Engineering Fracture mechanics, vol. 77, pp. 945-966, 2004.

[13]. M. Gosz, J. Dolbow and B. Moran, "Domain Integral Formulation for Stress Intensity Factor Computation Along Curved Three-Dimensional Interface Cracks," International Journals of Solids and Structures, vol. 35, pp. 1763-1783, 1998.

[14]. T. L. Anderson, Fracture Mechanics: Fundamentals and Applications, CRC: Press-Book, 2004.

[15]. K. G. Kodancha and S. K. Kudari, "Stress Triaxiality dependant In-Plane and Out-Of-Plane constraint effects in a CT Specimen," in Proceedings of NAME, 2010.

**M179**

# "TORQUE-ANGLE DESIGN, ANALYSIS AND EXPERIMENTAL CHARACTERIZATION OF CYLINDER HEAD BOLT IN DIESEL ENGINE"

Tushar Thombare[1], Prof. J. S. Joshi[2],

[1]*PG Student, Department of Mechanical Engineering, Textile and Engineering Institute, Ichalkaranji,*

[2]*Professor, Department of Mechanical Engineering, Textile and Engineering Institute, Ichalkaranji,*

*Abstract:* **Today, large amounts of fasteners are used in the assembly of diesel engines. A critical component of designing bolted joints is not only determining the number of bolts, the size of them, and the placement of them but also determining the appropriate preload for the bolt and the torque-angle that must be applied to achieve the desired preload. There is no one right choice for the preload or torque. Many factors need to be considered when making this determination. The preload of the cylinder head bolts is an area of interest and concern for the design engineers that are involved in the assembly of the diesel engine. In theoretical approach, the preload force to be applied is calculated based on the percentage yield of the bolt. The fatigue analysis is carried out for this preload using the Goodman line criterion. The cover factor is compared to the allowable value of the safety design. With Torque-Angle torqueing, the bolt tightens with an initial specific 'snug torque', and then tightens it further with an angle to achieve precise clamping. This is necessary for high performance engines which require the utmost precision of engine head sealing as their engine heads are subject to higher cyclic loads. Elongation of bolts is then obtained using FEA software ANSYS 14 and MC900 experimental equipment. The characteristic curves between Angle vs. Elongation were plotted to compare the analytical, FEA and experimental results.**

*Keywords-Bolts Pretension, Cylinder Head Bolt, Elongation, Torque-Angle, MC900*

**Nomenclature:**

$P_{peak}$
= Young's modulus of parts at temp 'T'f bolt for infinitely stiff mating parts.
$d_B$= Block internal diameter
$N_{ycl}$= no of bolts for cylinder head
d= bolt major diameter
p = pitch of the bolt
$A_t$ = Area of the threaded portion, mm2
$A_d$= Area of the unthreaded portion, $mm^2$
$l_t$ = Length of the threaded portion, mm
$l_d$ = Length of the unthreaded portion, mm
$d_w$ = diameter of a washer head
$d_H$ = Clearance hole diameter
$l_k$ = Grip Length
φ = Pressure cone angle
$S_e$ = Endurance strength
$S_{ut}$ = Ultimate tensile strength
$S_m$ = Mean stress
ΔT = Change in temperature
$F_{VT}$ = Preload at temperature T
$F_{VRT}$ = Preload at room temperature
$\delta_{SRT}$ = Elastic compliance of the bolt at RT
$\delta_{PRT}$ = Elastic compliance of the parts at RT
$\alpha_{PT}$ = Coefficient of thermal expansion of parts material
$\alpha_{ST}$ = Coefficient of thermal expansion of bolt material
$E_{SRT}$= Young's modulus of bolt at room temperature
$E_{PRT}$= Young's modulus of parts at room temperature,
$E_{ST}$= Young's modulus of bolt at temp 'T'
$E_{PT}$ = Young's modulus of parts at temp 'T'
θ = Angle turned for tightening of bolt after the snug torque
$\delta l_{stiff}$ = Elongation of bolt for infinitely stiff mating parts.
$\delta l_{snug}$= Elongation of bolt considering snug torque elongation
$P_{gen}$ = Preload generated due to $\delta l_{snug}$
$\delta l_{comp}$= compression of mating members due to load $P_{gen}$.
$\delta l_{final}$= Elongation of bolt considering compression of members.

## I. INTRODUCTION

Everyone knows that the design and development of automobile engines are a complicated process. Modern light weight designs have demanding requirements. To achieve the best performance of an engine in any operating condition even in harsh natural environments, many analytical tools and experimental methods are used to obtain the optimum parameters for engine design. Currently, preload of fasteners is an area of interest and concern for design engineers dealing with the assembly of Diesel Engines[2]. To meet these requirements, cylinder head bolts have undergone significant improvements in materials and manufacturing. Along with these improvements have come advancements in tightening procedures for bolt installation into an engine block now made from a rundown study on the cylinder-head bolt of choice. To prevent potential failure modes such as embedding, clamp load loss, bolt yielding and bolt fatigue failure.

The 'Verein Deutscher Ingenieure' (VDI) 2230 guide line of the 'The Association of German Engineers 'can be a useful tool for designing critical loaded bolt joints in diesel engine like cylinder head, connecting rod, flywheel, main bearing cap bolted joint. As per reviewed literature, in torque-angle tightening technique scatter in preload of bolts is about ±7 to ±15 %. [1]

## II. ANALYTICAL APPROACH:

This section summarizes the results of the cylinder head bolt joint analysis. The detail calculations for this analysis described in equation (1-12).These steps are

1. Determine service loads on the joint and bolts and bolt size and dimension.
2. Calculate load factor and load plane factor.
3. Calculate preload losses due to embedding and relaxation.
4. Calculate maximum and minimum preloads.
5. Determine Fatigue strengths (allowable) for bolts and Calculate margins of safety.
6. Determine 'snug torque' and angle to turn nut.

**Service loads acting on the cylinder head bolts:**

This bolt-joint have two primary loads 1) blow –off load and 2) a seal –seating load. Since both loads are tensile in nature, and since both act along the central axis of the joint. If shear loads had been present, or if the loads had acted off-axis (eccentric), then this step becomes much more complicated. Cylinder head bolts are subjected to combustion pressures when engine is in working condition and that force tries to eject the joint,Total combustion force due to one cylinder,

materials other than steel. Therefore, to guarantee that the assembly between the cylinder head, bolts, and gasket is reliable, leak proof and effective, through analysis of the same followed by tests becomes extremely important.

The fastening process for a joint consists of rotating a bolt which forces the bolt to elongate producing a clamping force to secure the joint. Tightening the fastener as much as possible without incurring damage to either the bolt or joint members is the goal of any tightening strategy. There are many tightening strategy that can be implement and a variety of advanced equipment to examine any strategy [1]. Present work details out the torque design, analysis of critically loaded cylinder head fasteners of diesel engines. In this paper the focus was on determining the joint behavior through

$$F_{cyl} = \frac{\pi}{4} \times d_b \times P_{peak} \quad \text{(N)}$$

Force per bolt,

$$f_{cyl} = \frac{F_{cyl}}{N_{cyl}} \quad \text{Eq. (1)}$$

**Calculation bolt diameter, grade, and length:**

Determine bolt diameter in cylinder head bolt-joint according to guideline VDI2230 part-1, which was prepared by the Association of German Engineer's (VDI).

Axial load type and location: dynamic and concentric

Tightening technique: Torque –Angle method

Axial and Transverse force per bolt,

$$= \frac{N_d \times P_{peak} \times \frac{\pi}{4} \times d_g}{N_{cyl}}$$

And,

$$F_{transverse} = \frac{N_d \times M_{head} \times g}{N_{cyl}}$$

If only transverse or axial loads exist, then F=$F_{axial}$or $F_{transverse}$. If there are both transverse and longitudinal loads exist, if $F_{axial}$<$F_{transverse}/\mu_{min}$ Then F= $F_{transverse}$else F=$F_{axial}$.[1]

To calculate the tensile stress area, Stress diameter of the bolts is calculated, stress diameter is the mean of minor $d_m$ $d$ diameter = d-1.226869×p and pitch diameter $p$= d-0.649519×p. [2]

Stress-diameter, $d_{st} = \frac{d_m + d_p}{2}$ (mm)

**Calculate Preload and their losses:**

Now, preload calculation is done considering that the bolt elongates up to desired percentage of proof strength of the bolt. Preload generated per bolt is compared with the service load per bolt taking into account losses due to embedding, relaxation and temperature. This is

essential to see whether generated preload is sufficient or not. To ensure this cover factor is calculated and compared with permissible value for safe design.

Preload generated per bolt (gasket sealing),

$F_{gen}$= Yield Strength × % yield × $\frac{\pi}{4} \times d_{st}^{2}$ (N)Eq.(3)

Remaining preload after considering losses due to Embedding and Relaxation [3][4],

$f_{E\&R}$= 0.8 × $F_{max}$ Eq. (4)

Remaining preload after considering losses due to temperature [3],

$$F_{VT} = \frac{F_{VRT}(\delta_{SRT}+\delta_{PRT}) - l_K(\alpha_{ST}\Delta T_S - \alpha_{PT}\Delta T_P)}{\left(\frac{\delta_{SRT}.E_{SRT}}{E_{St}}\right)+\left(\frac{\delta_{PRT}.E_{PRT}}{E_{PT}}\right)}$$

Eq.(5)

Where: $F_{VRT}$= $F_{E\&R}$

Cover factor $=\frac{F_{VT}}{service\ load}$

Eq.(6)

**Calculate for under head crushing stress:**

Crushing stress under the head surface can be found from the generated preload and compared with the permissible values.

Crushing stress under head surface,

$\sigma_{cr} = F_{gen} \times \frac{\pi}{4} \times (d_W^2 - d_H^2)$ Eq.(7)

**Calculate stiffness of bolt and mating members:**

The stiffness of the bolt or screw within a clamped zone is consists of two parts, unthreaded shank portion and threaded portion, thus the equivalent stiffness constant of the threaded and unthreaded portion of the bolt is calculated by the considering the springs in series, [5]

Equivalent stiffness of bolt $K_b$, ,

$K_b = \frac{Ad.At.Eb}{Ad.Lt+At.Ld}$ Eq. (8)

And stiffness of mating members,

$$Km = \frac{\pi \times w \times Ep \times dh \times Tan\phi}{2 \times \ln\left(\frac{(dw+dh)\times(dw+(w\times lk\times Tan\phi))-dh)}{(dw-dh)\times(dw+(w\times lk\times Tan\phi)+dh)}\right)}$$

Eq. (9)

Percentage of load carried by the bolt,

Joint constant (ϕ) = $\frac{K_b}{K_b+K_m}$

Joint load plane Factor, Eq.(10)

$$\phi_n = \frac{K_b}{K_b+K_m} \times n$$

Here, n= loaded plane factor constant lies between 0 to1

Service load carried by the bolt is based on (joint constant) percentage of load carried by the bolt and is calculated on the basis of stiffness of bolt and its mating members. [4]

Thereafter, for designed preload fatigue failure is checked considering Goodman line criterion. Minimum bolt load= Bolt preload generated+ loss due embedding+ thermal+ Relaxation

Maximum bolt load = Bolt preload generated +service load taken by the bolt+ all loss in preload

$$S_a = \frac{S_e(S_{ut}-\sigma i)}{S_{ut}+S_e}$$

And

$S_m = S_a + \sigma_i$ Eq (11)

Bolt elongation for infinitely stiff mating parts,

$\delta l_{stiff} = \frac{angle\ turned \times pitch}{360}$ Eq. (12)

$F_{snug} = \frac{T_{snug}}{K \times D}$ Eq. (13)

$\delta l_{snug} = \frac{F_{snug}}{K_b}$ Eq. (14)

**Sample calculations**:

Input data: Select Bolt Size M12 X 1.75; Select Bolt Type = Std. Shank Type: Select Grade = 12.9; $l_d$=66 mm; $l_t$ = 64 mm; $d_b$ =107 mm; $d_H$ = 13 mm; $d_W$ = 22mm; $P_{cyl\ peak}$ = 150 bar; N = 6; $H_t$ = 105 mm; $E_{SRT}$ $B_t$=6; $g_t$ =1.45mm; =210000MPa; $E_{PRT}$=110000MPa; $E_{ST}$=203000 Mpa; $E_{PT}$= 103000 Mpa; $\alpha_{PT}$ =1.35E-05mm/$^0$C; $\alpha_{ST}$ = 1.26E-05mm/$^0$C; Gasket young's modulus = 210000 Mpa; Gasket stiffness = 160000 Mpa; Yield strength=1080Mpa; Torque applied to % Yield strength =85% ; Nut factor = 0.18; After burnishing Snug torque = 0.16 ; Operating temperature = 110$^0$C Permissible cover factor=2

Table.1. Calculated values using Eq. no. 1 to Eq. no. 12

| | |
|---|---|
| $f_{cyl}$ | 26316 N |
| $F_{gen}$ | 78000 N |
| $K_b$ | 156359Mpa |
| $K_m$ | 160000Mpa |
| Load Factor | 53.74% |
| Joint constant( load plane factor) | 11.70% |
| Service load on bolt | 3000N |
| $F_{E\&R}$ | 8089N |
| $F_{VT}$ | 910.83N |
| Crushing stress | 315.25Mpa |

| | |
|---|---|
| $S_a$ and $S_m$ | 38N/mm$^2$, 963N/mm$^2$ |
| Calculated cover factor | 3.60 |

Most of time, fatigue loading encountered in the analysis of bolted joints is one in which externally applied load fluctuates between zero and some maximum force P.

elongations can be determined when bolts are under different types of load.

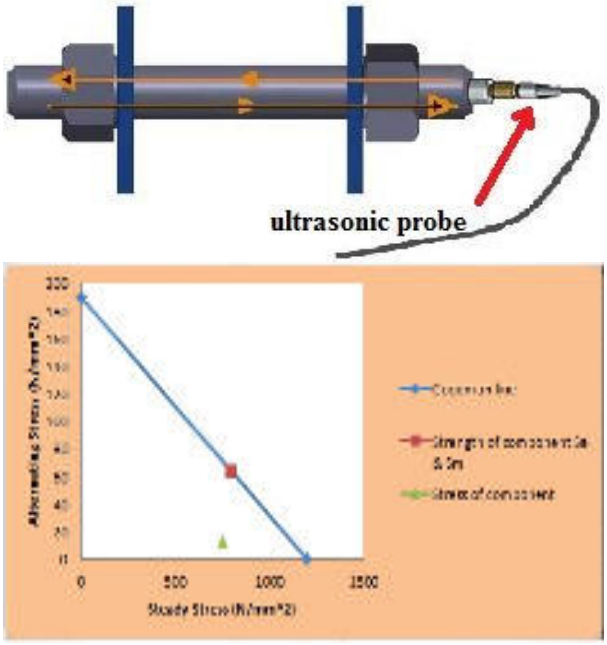


Fig.1. Goodman criterion line

For Torque-angle method,
Snug point is generally lies between 60 to 70% of yield point.so preload (P) is calculated of bolt (D) due Torque (T) and Nut Factor (K),

$$P = \frac{T}{KD}$$

Table.2. Analytical Calculation of Bolt (Eq. 12 &13)

| Torque Step- 70N-m+360 θ Back-off +105N-m+90deg | | | |
|---|---|---|---|
| | $F_{gen}$ | $\delta l_{stiff}$ | $\delta l_{comp}$ |
| 70 N-m | 32407.41 | 0.21 | 0.202546 |
| 105 N-m | 54687.5 | 0.38 | 0.341797 |
| 90 Deg | 87695.49 | 0.58 | 0.548097 |

**III. Finite Element Simulation:**

The 'Verein Deutscher Ingenieure' (VDI) 2230 guide line of the 'The Association of German engineers' can be a useful tool for designing critical loaded bolt joints in diesel engine like cylinder head, connecting rod, flywheel, main bearing cap bolted joint. But, its use is limited due to the inherent assumptions of the analytical calculation models, such as the pressure cone shape model for stiffness of clamped plates, the empirical parameters to account for the additional bolt stiffness from the head and nut etc.

The finite element method (FEM) is the alternative way to design and analyze the bolted-joint structure. In analysis, interest is to find out the elongation of the bolt. Bolt pretension to define boundary condition in the analysis. Preload generated while doing the assembly of cylinder head is calculated from the experimental MC900 ultrasonic instrument. It is used as bolt pretension for FEM analysis.

Figures 3, 4 shows elongation of cylinder head bolts when torque-angle tightening technique is used. Figures 2 show whole assembly of cylinder head, gasket, bolt and cylinder block.

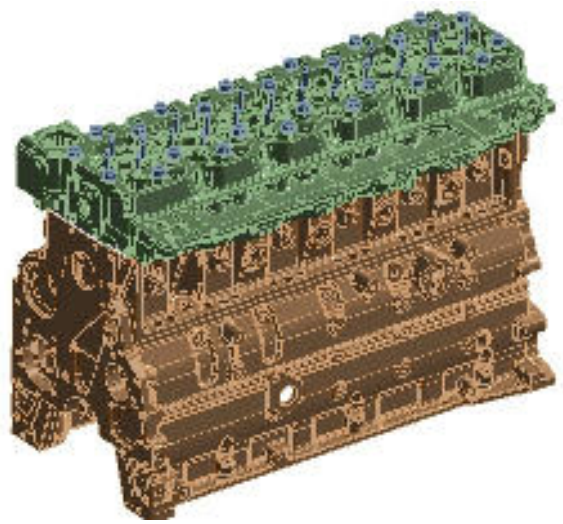

Fig.2. cylinder head bolt-joint assembly

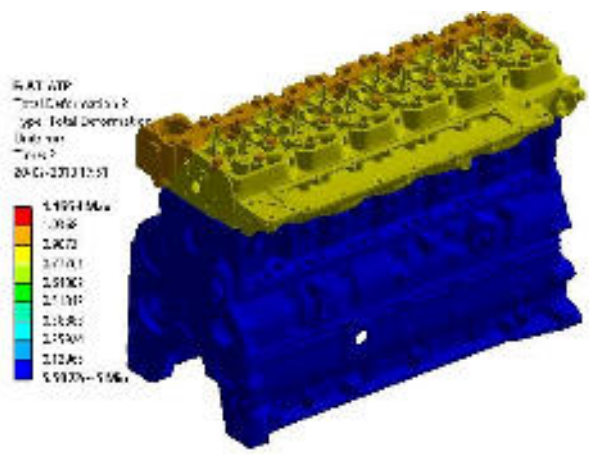

Fig.3. Elongation of bolt due to preload (81kN)

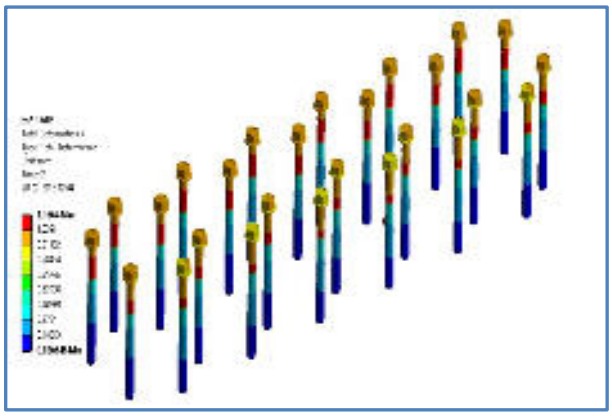

Fig.4. Behavior of elongated of bolt due (105N-m+ 90 degree) torque

**EXPERIMENTAL SETUP:**

The MC900 hardware and MC911 software can determine the elongation of bolts under different loads. To calibrate the system, time of flight is used; an ultrasonic wave packet travels from one end of the fastener to the other and back. With this calibration Fig.5. Fastener with ultrasonic probe

**Equipment Required**:

- MC900 ultrasonic device
- Ultrasonic pickups
- Temperature compensation sensor
- Torque/angle sensor, torque range 0 to 1000Nm
- Cylinder block, Cylinder head, Cylinder Head Gasket &Fastener joint assembly

Before start of the experiment both the top and bottom face of the bolt must be grinded. As the USM transducer is resting on to the head of the bolt, head surface and bottom face should have good surface finish for better reflection of the pulses.

1. Fit the cylinder head to the block using a new cylinder head gasket.(Ensure the dowels are fitted in the block).
2. Mark the shank of the bolts with a paint pen. Four bolts from each of the three tests are to be instrumented with a micro-tensor and 2 x coaxial cables.
3. Without lubricating the bolts, locate the bolts into position (Page 9) ensuring bolts 1, 7, 13 and 18 are instrumented.
4. Connect the coaxial cables from the instrumented bolts to the MC900 gauge.
5. Fit the temperature transducer to the head of one of the cylinder head bolts
6. Set-up the MC900 file with 18 x bolts premeasured to record axial load for each test.
7. Set-up / calibrate the transducer to the MC900 gauge.
8. Following the torque all the bolts sequentially and Record the axial load of each bolt after each tightening event.
9. Evaluate the data following test to identify all the events that occurred and to calculate nut factor and joint stiffness.
10. Repeat all tasks for data collection tests 1, 2 and 3.

With the help of MTS 50 Ton hydraulic machine and MC900 ultrasonic instrument, bolt loaded up to their ultimate tensile strength. (1200MPa)

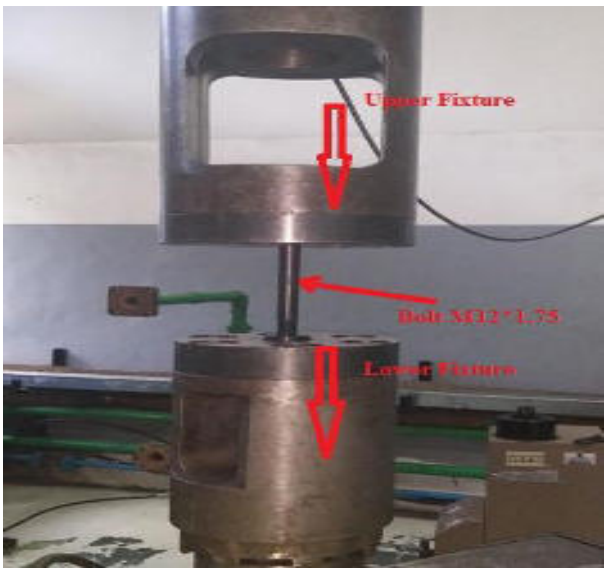


Fig.6. MTS 50 Ton System

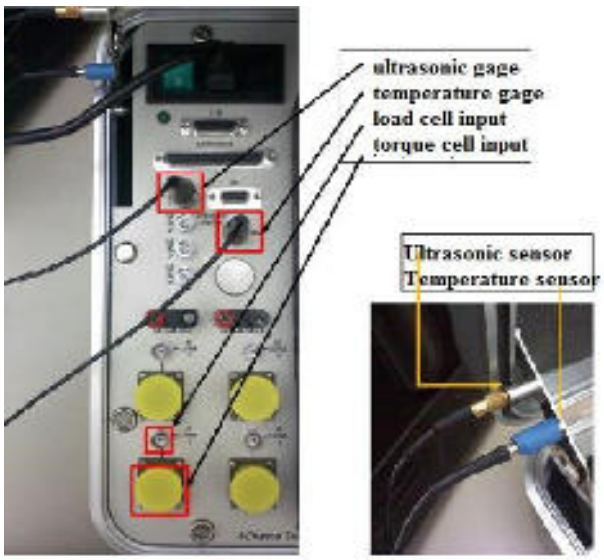


Fig.7. MC900 Ultrasonic Set-up

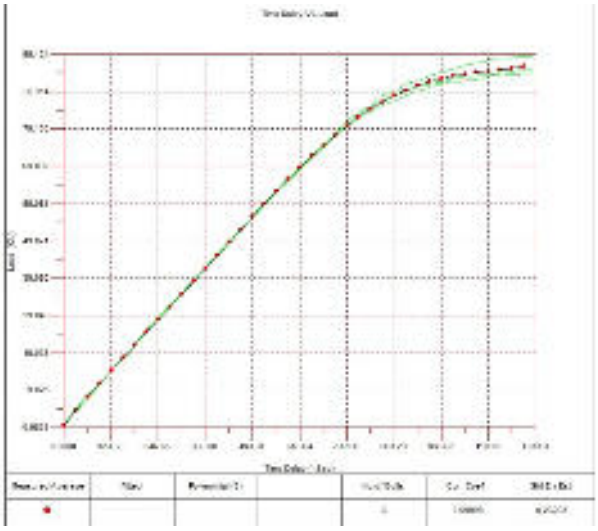

Fig.8. bolt calibration file

**Experimental Procedure-**

MC900 Procedure for Torque & Angle Studies that includes:

1. Torque and angle studies on multi-bolt joints
2. Single & multi spindle comparisons.
3. Joint stiffness
4. Nut factor
5. Bolt Calibrations Files

**Measurement system analysis of the MC900 bolt gauge:** This experiment was completed to understand the measurement system analysis of the MC900 bolt gauge when pre-measuring bolts

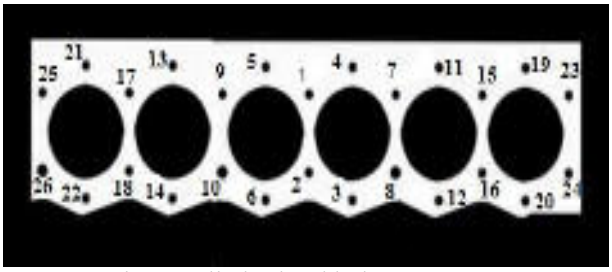

Fig.9. Cylinder head bolt torque Sequence

.

The purpose of this MSA is to understand the Gage R&R, Repeatability and Re-Produce ability of the MC900 bolt gauge. The %R&R is the best measure for the Design Specialist –This estimates how well the Measurement System performs with respect to the overall process variation. As a target, aim for <30% Gage R&R.

Torque process of 70 Nm + 180 degree back- off angle + 105Nm + 90 degrees.

- 3 x operators.
- 18 x test pieces i.e. cylinder head bolts.
- 1 x measuring device.
- Temperature sensor used in all cases.
- 3 x identical files for each measurement.

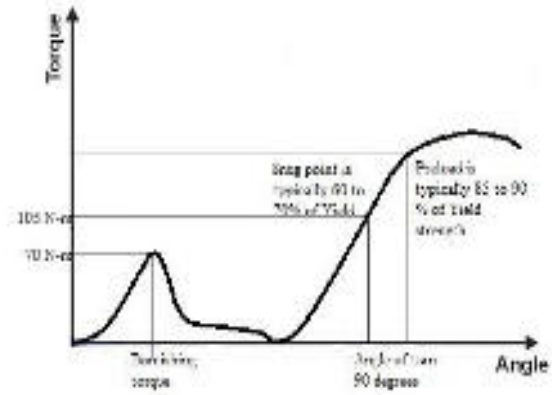


Fig. 10.Torque-angle step(70 Nm+180 degree back- off angle+105Nm +90 degrees)

Selecting the first or second echo during premeasurement will change the initial TOF. The final results will not be affected as the change in TOF during elongation will be identical when using either waveform.

| Bolt no | Operator | | | Bolt no | Operator | | |
|---|---|---|---|---|---|---|---|
| | A | B | C | | A | B | C |
| 1 | 84.28 | 85.55 | 85.39 | 14 | 87.38 | 85.08 | 86.07 |
| 2 | 84.35 | 84.27 | 84.96 | 15 | 82.64 | 83.95 | 83.10 |
| 3 | 86.31 | 85.96 | 86.38 | 16 | 82.14 | 85.78 | 85.97 |
| 4 | 86.13 | 85.62 | 86.31 | 17 | 82.42 | 82.33 | 82.04 |
| 5 | 86.17 | 87.74 | 88.30 | 18 | 84.04 | 84.35 | 83.39 |
| 6 | 82.52 | 82.33 | 82.76 | 19 | 86.13 | 85.62 | 86.31 |
| 7 | 84.22 | 82.13 | 84.49 | 20 | 86.17 | 87.74 | 88.30 |
| 8 | 88.46 | 87.02 | 87.68 | 21 | 82.52 | 82.33 | 82.76 |
| 9 | 87.02 | 86.27 | 86.28 | 22 | 84.22 | 82.13 | 84.49 |
| 10 | 83.30 | 83.18 | 81.54 | 23 | 88.46 | 87.02 | 87.68 |
| 11 | 82.53 | 84.67 | 86.37 | 24 | 87.02 | 86.27 | 86.28 |
| 12 | 81.23 | 81.42 | 82.10 | 25 | 83.30 | 83.18 | 81.54 |
| 13 | 81.90 | 81.57 | 80.58 | 26 | 84.53 | 85.67 | 86.37 |

Table.3. Variation in preload by operator

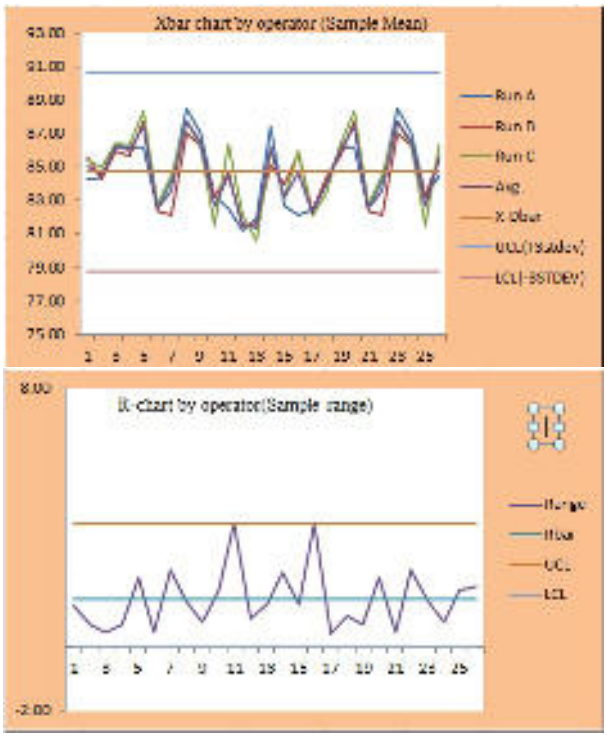


Fig.11. R-chart & Xbar chart(control chart)

**Design of Experiment:** The objectives of these studies are to understand the events that occur during torque angle tightening process of the cylinder head bolts. These events will be monitored by using the latest dynamic measuring capabilities of the MC900 bolt gauge.

The results of these studies will be used to write a procedure detailing how to develop torque and angle Specifications.

The following values can be determined from the MC911 software:

- Nut Factor
- Joint Stiffness

The following measurements are to be recorded during the tightening process of data collection studies 1, 2,3:

- Torque
- Angle of rotation
- Axial load of the fastener

Tighten instrumented bolts 1, 7, 13 & 18 at a constant speed (20rpm?) until the max pre-load of 81kN (nominal 81kN +6kN tolerance) is reached.

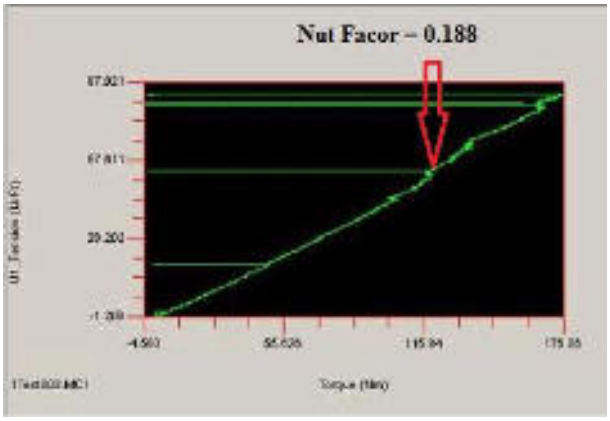


Fig.12. Nut factor before snug torque

After burnishing Torque 70 N-m+ 180 degree Back-off angle, torque applied on bolt as 105N-m + 90 degree angle. So Nut factor value reduces from 0.188 to 0.168.

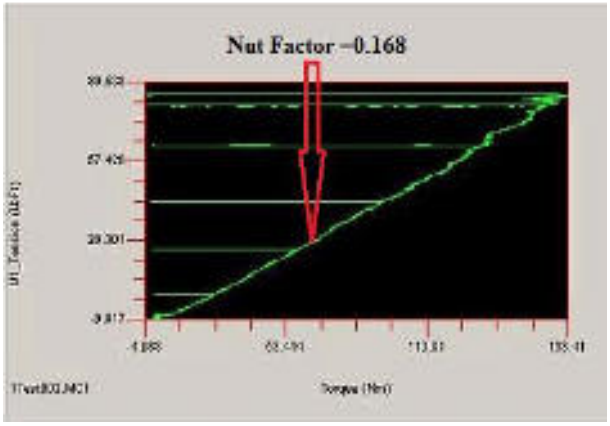


Fig.12. Nut factor after snug point

Ultrasonic measurement of clamping load is obtained through a predictable decrease in the sound velocity within body of bolt with increase in tensile load. clamping load applies on bolted joint then bolt is elongated and mating members are compressed . fig.13. and 14 shows the stiffness of joint and bolt elongation along with clamping force 81 KN.

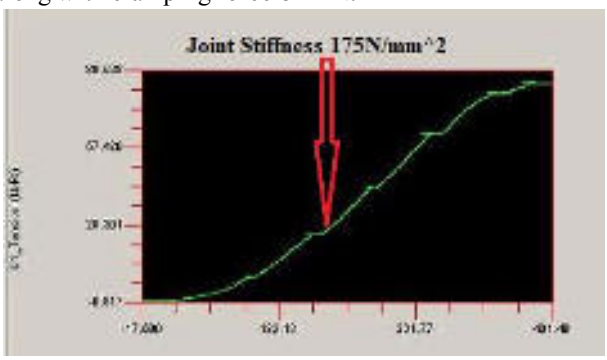


Fig.13. Joint Stiffness of mating member

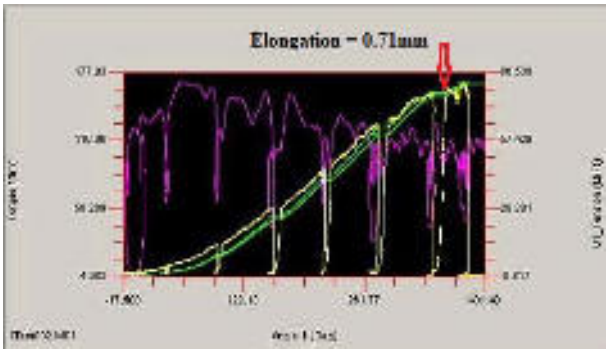


Fig.14. Elongation of bolt

Preload is the initial tension placed on bolts in order to clamp the joint members together. Fig. 15 shows the bolt behavior along the torque vs angle which is represented in terms of preload.

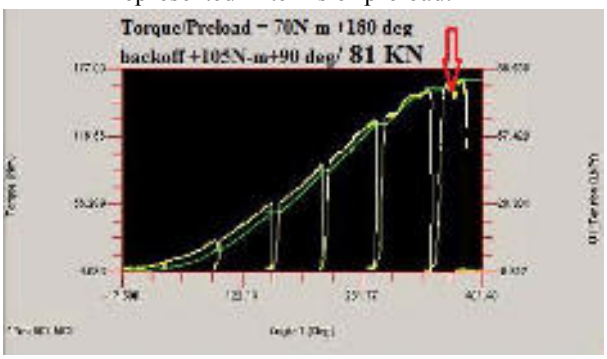


Fig.15. Axial load and Torque on bolt

**Results and Conclusion:** This research paper aims for giving scientific procedure for designing torque-angle tightening technique.

**M12*1.75 Cylinder Head Bolt:** Results reveals that for critical loaded cylinder head bolt joints torque-angle control tightening technique gives better result for any size, grade, any type of bolt.

- The Goodman criteria line reveals that for the designed preload bolt is safe under fatigue.
- Nut factor values changes from 0.188 to o.164 after apply burnishing torque 70 N-m +180 degree back off angle.
- For M12*1.75 that had applying ¼ th (90 degree) as the part turn after the snug torque 105 N-m was sufficient to reach the bolts preload load.
- The results of Analytical, FEA, and Experimental (MC900) are compared with the help of characteristic curve between Load vs Deformation plot.

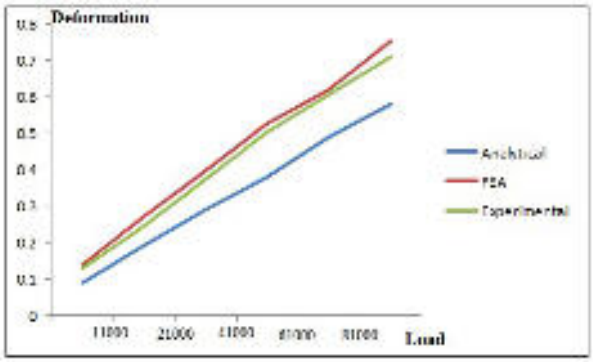


Fig.16. Load vs Deformation

- The characteristic curve reveals that result between FEA and experimental are match with error 5%
- The design criteria are satisfied and joint design is acceptable.

**Acknowledgements**

This research was financially and technically supported by Cummins technical center of India. The author is grateful for this support. The first author PG studies and experimental research are supported by department of mechanical engineering and kindness of the PG supervisor, associate professor J. S. Joshi.

**References**

1. Metal fatigue analysis handbook: Chapter no. 12 Design and Analysis of Metric Bolted Joints, VDI Guideline and Finite Element Analysis by Yung-Li Lee, Chrysler Group LLC & Hsin-Chung Ho, Chrysler Group LLC. pp.490.
2. Shigley's Mechanical Engineering Design, Eighth Edition Budynas−Nisbett, pp. 399.
3. VDI 2230 Part I standards, February 2003, An German standard book for bolt design.
4. Introduction to the Design and Behavior of Bolted Joints by, John H. Bickford, Founding Editor L. L. Faulkner Columbus Division, Battelle Memorial Institute and Department of Mechanical Engineering, The Ohio State University Columbus, Ohio, pp.167 to168.
5. Shigley's Mechanical Engineering Design, Eighth Edition Budynas−Nisbett, pp. 429-431.pp.413
6. MC900 ultrasonic bolt preload measurement instrument manual

**M182**

# Static & Modal Analysis of Movable beam of Hydraulic Press

Mr. Asif I. Makwana

M.E. Student,
CAD-CAM,
Marwadi Education Foundation,
Rajkot, India
Makwanasf62@gmail.com

Prashant S Ujeniya
Assistant Professor, Mechanical engineering.
Marwadi Education Foundation,

Rajkot, India

Anchit J Kaneriya
Assistant Professor, Mechanical engineering.
Marwadi Education Foundation,
Rajkot, India

***Abstract*—Now a day a field of Press work is growing fast.Due optimization and weight reduction of hydraulic press it raises failure issue of components. A hydraulic press is a machine using a hydraulic cylindrical punch to generate a compressive force. Frame, hydraulic cylinder, Moveable beam and press table are the main components of the hydraulic press. The analysis is performed on a hydraulic press which is intended for use in the Forming operation and is a part of a production line. Four column with cylinder placed on upper cross beam exerts the compressive force on moveable beam. Considering the issue of bearing jammed and higher force in movable beam and pressure plate becomes a point of concentration for analysis. The finite analysis method is used to analyze the stress concentration maximum stress and its distribution at the hole, a crucial portion of the plate. Theoretical analysis is done perform to meet validation of software analysis. ANSYS software is used to carry out FEA analysis and for modeling, CREO is used.**

*Keywords— Hydraulic Press , Stress concentration, FEA Analysis, Movable Beam*

## 5. INTRODUCTION

A hydraulic press is a mechanical machine used for lifting or compressing various parts and components. The force is generated by the use of hydraulic fluids to increase the pressure inside the cylinder. The hydraulic press machine works on Pascal's principle. Which state that “when pressure is applied on fluid in an enclosed system. The pressure throughout system always remains constant”.

Bramah in 1795 was granted a patent for his hydraulic press. Over the period of time that we are evolving the press machine designs to advance level while, Bramah & William George Armstrong are the two pioneers in this field.
Hydraulic press is used for almost all industrial purposes, but basically it is used for transforming metallic objects into sheets of metal. In other industries, it is used for the thinning of glass, making powders in case of the cosmetic industry and for forming the tablets for medical use. Hydraulic press can commonly be found for forging, molding, blanking, punching, deep drawing and many other metal forming operations.

The working drive of press has evolved from Mechanical to Hydraulic and even Pneumatic. With the advancement in technology, integration of electronics and electrical devices with mechanical devices has now been possible. These new Hydraulic and Pneumatic presses have better capacity and are far more reliable and easy to maintain.

Hydraulic press machine consists of basic components used in a hydraulic system that includes a hydraulic cylinder, piston, up right column, movable beam, upper beam, lower beam, pipelines for fluid flow, oil reservoir and a controller. The piston inside the cylinder is pushed by hydraulic fluid, which causes the movement of piston. A movable beam connected with piston, then compresses the material. Incompressible fluid such as oil with proper density and viscosity is used as a link for transmitting hydraulic pressure.
In the ideal condition, the movable beam has no constraint in all the direction. So the movable beam situated at the nearest place to the workpiece, so its design quality direct influence the precision of workpiece. Therefore the movable beam subjected to bending, shear and compression, and then produced the corresponding deformations.

## SS. DESIGN CONSIDERATION OF BEAM

Every design starts with the conventional calculations by applying various fundamentals of design. The top plate is subjected to pure bending stress during the operation.Therefore, design considerations are essential for plates subjected to bending stress.

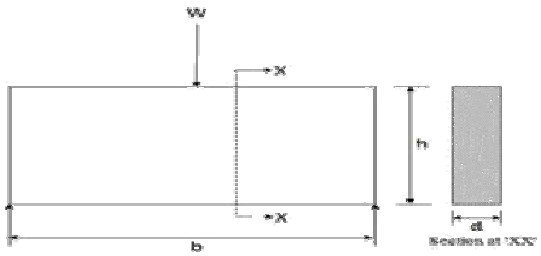

TABLE 1 GEOMETRICAL DIMENSION

| *Constrain* | *value* |
|---|---|
| Length (b) | 1950mm |
| Height (h) | 900mm |
| Thickness (d) | 75mm |
| Maximum applied load | 200 ton |

Considering beam subjected to a bending stress: ($\sigma b$ )

$$M/I = \sigma b / Y$$

M = Bending moment at the given section.

$\sigma b$ =Bending stress.

I = Moment of inertia of the cross section.

Y = Distance from the neutral surface to the extreme fiber.

. Bending moment is given by:

$$M = W \times b / 4$$

$$2000 \times 10^3 \times 1950 / 4$$

$$9.75 \times 10^8 \text{ N.mm}$$

Moment of inertia of cross section:

$$I = dh3 / 12$$

$$I.\ 75 \times (900)^3 / 12$$

$$J.\ 4.55625 \times 10^9 \text{ mm}^4$$

$$Y = h / 2$$

M. 900 / 2

N. 450 mm.

Therefore,

$$\sigma b = M \times Y / I$$

$$\square\ 9.75 \times 10^8 \times 450 / 4.55625 \times 10^9$$

$$96.29 \approx 97 \text{ N / mm}^2$$

The ultimate tensile strength of mild steel is $\sigma ut$ = 460 mpa , consider fos = 1.2

According to the maximum principal stress theory $\sigma allowable = \sigma ut$ / fos = 460 / 1.2 = 383 Mpa Deflection is given by:

Consider E = 205 GPA = 205 N/mm$^2$

$$J.= PL^3 / 48EI$$

$$2000 \times 10^3 \times (1950)^3 / 48205000 \times 4.5625 \times 019$$

K. = 0.33 mm

Now,

Consider movable as a simply supported beam with concentrated load (P) at the center.

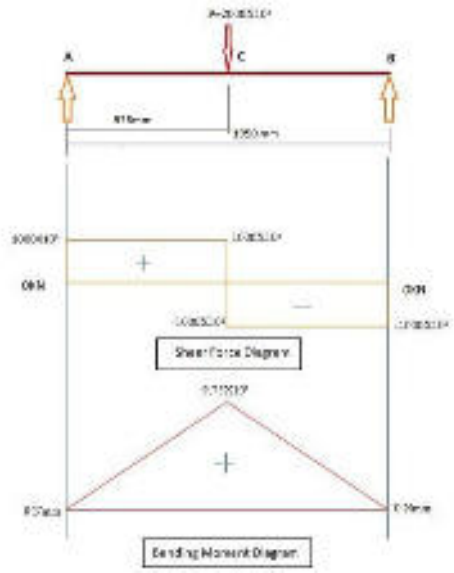

*[18] Reactions at the ends*

$Ra + R_b = 2000x10^3$ N

Taking moment at Reaction force Ra

$(2000x10^3 \text{ x } 975) - (1950 \text{ x } R_b) =$

$0\ R_b = 1000x103$ N

Same $R_a = 1000x103$ N

*[19] Shear force*

Algebraic sum of unbalanced vertical forces to the left or right side of the section is called shear force at that section. Unit of shear force is N.

Shear forces are unaligned forces pushing one part of a body in one direction, and another part of the body in the opposite direction.

The shear force 0 at begin and Ra= $1000x10^3$ N in upward direction.

At loading point (P) = Ra-P

$\square$ $(1000x10^3)-(2000x10^3)$

$\square$ $-1000x10^3$

For point P to B no other load there for shear force is P to B = $(-1000x10^3) + R_b$

$\square (-1000x10^3) + (1000x10^3)$

$\square$ 0

### C. Bending Moment

Bending moment is calculated by multiplying the external vector forces (load or reaction) by the vector distance at they are applied.

Now, Bending moment at hole section is M=1375x105 calculated by bending moment diagram.

Bending stress at hole section ($\sigma_b$)

$$\sigma_b = (M \times y)/I$$

$$(1375 \times 10^5) \times 450) / (4.55625 \times 10^9)$$

$$\square\ 13.5802\ N/mm^2$$

Area (A) = h x t

□ 900 x 75

□ 67500 mm2

Finding force (P) at hole section

$$\sigma b = P/A$$

$$13.5802 = P/67500$$

$$P = 916666\ N$$

Stress concentration at hole section Theoretical

$$Kt = \sigma max/\sigma 0$$

So,

$$\sigma\ max = \sigma\ ut/fos = 460/1.2 = 383\ Mpa$$

$$\sigma_0 = P/\ (W-2d)\ t$$

$$= 916666/\ ((900-2(170))\ 75)$$

$$\sigma_0 = 21.825\ Mpa$$

Therefore theoretical stress concentration,

$$Kt = \sigma_{max}/\sigma_0$$

383/21.825

Kt = 17.54

- *Analysis of beam:*

TABLE 2 MATERIAL SPECIFICATION

| | | |
|---|---|---|
| Yield Strength | 370 | MPa |
| Ultimate Tensile Strength | 460 | MPa |
| Density | 7861 kg/m3 | |
| Modulus of Elasticity | 200 | GPa |
| Poisson's Ratio | 0.29 | |
| Factor of Safety | 1.2 | |

Based on the past experience of manufacture, the model of the movable beam is made with the help of the 3D modeling CAD software creo 3.0.

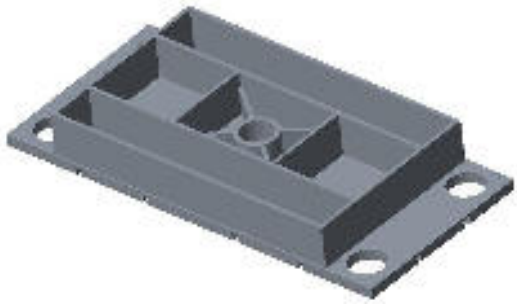

Existing model of movable beam

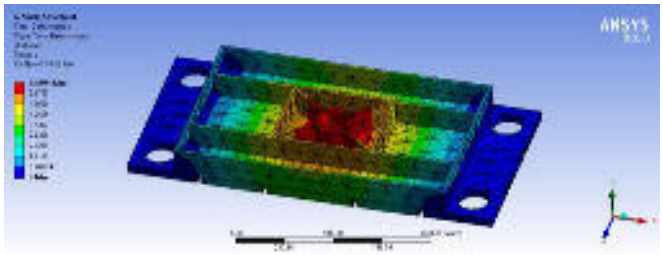


Deformation

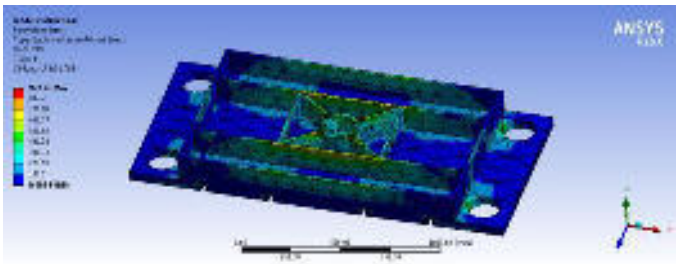


Euivalent (von-Mises) stress

The movable beam has been designed by putting rib structure onto the base plate. The design of rib structure is based on experiments and practice. In present work, the design is done to withstand the maximum deformation of 1.5 mm/m. This value is taken as per the requirement of industry and from various benchmark data. Here, two different designs of movable beam are presented using sizing optimization method.

Here, the maximum capacity of the machine is 200-tonns. So, the design of all components will be based on maximum applied load. The hydraulic cylinder is mounted onto the movable beam so it will carry that amount of force at the time. The design of movable beam is based to several iterations. From these iterations, the optimum design is selected. For this work, PTC CREO software is used for 3D modelling.

In all design iterations the shape and size of rib structure is varied according to design requirements.

Based on results of existing movable beam, in the iteration 1 adding more rib in movable beam then analysed

*E. Concept 1*

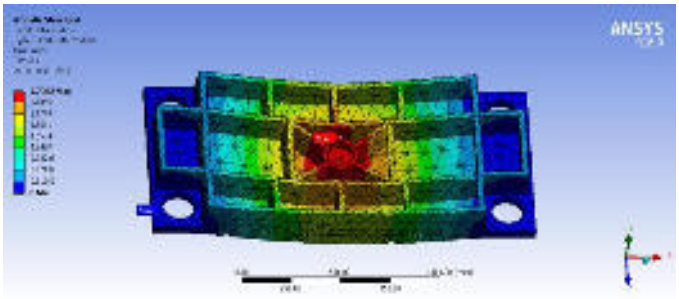


Deformation

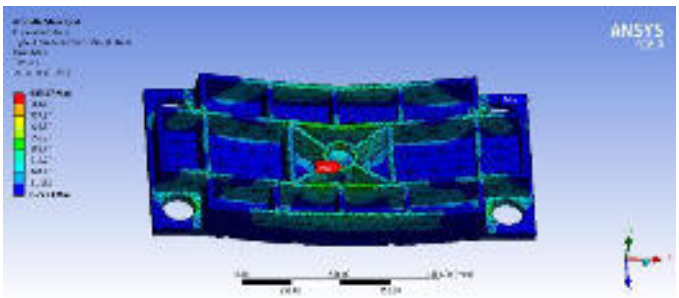


Euivalent (von-Mises) stress

Based on results of iteration 1 still stress value and displacement value is above permissible limit increase plate thickness 50 to 75 and rid width then analysed

*F. Concept- 2:*

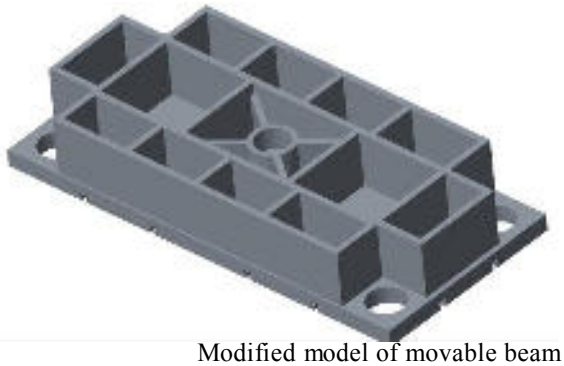

Modified model of movable beam

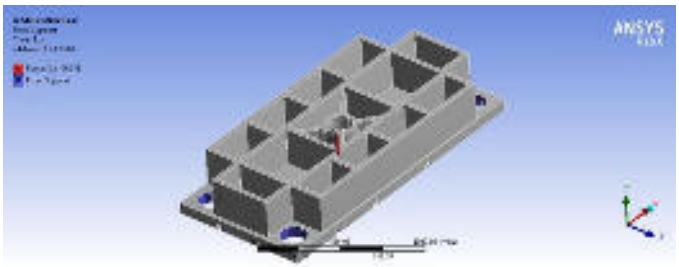


Loading and boundary condition

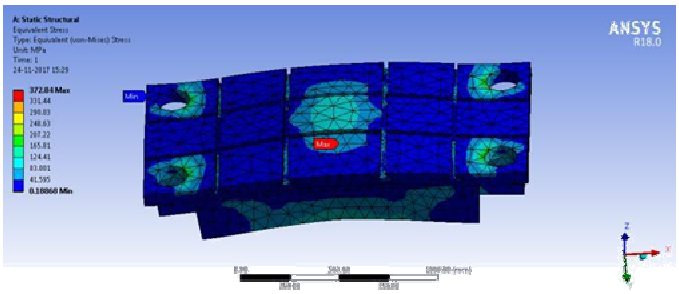


Stress result

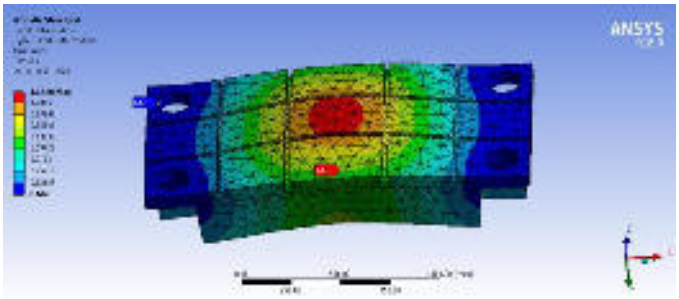


Deformation result

## RESULT AND DISCUSSION

For solution of the above problem statement the Finite Element Analysis method is used. In this case, a 200-ton of load is applied at the middle of the plate by the cylinder. All four holes at the corner will remain fixed, because it is supported by pillars and fixed at initial condition or at maximum load condition.

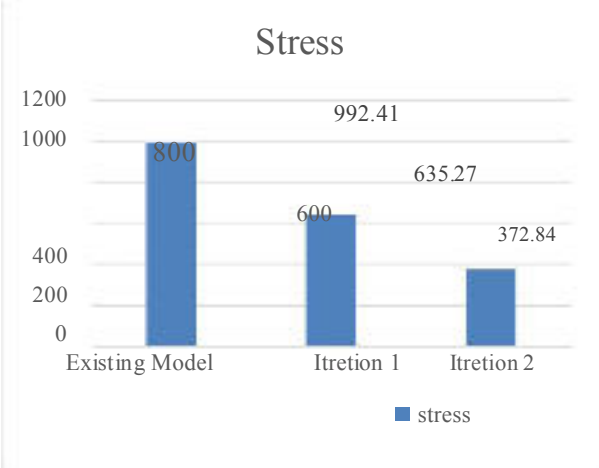

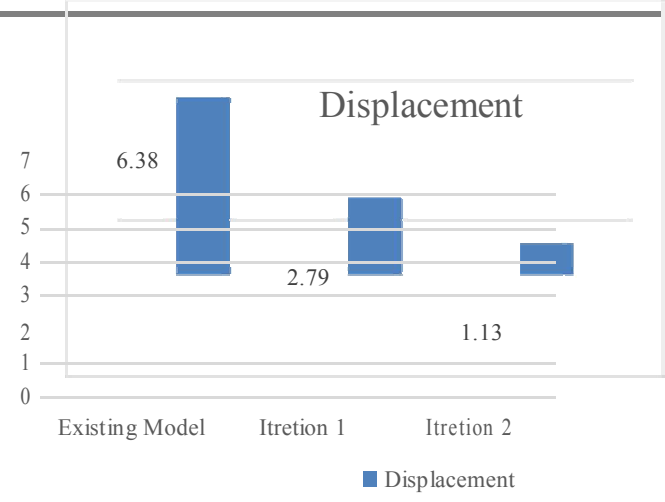


Here, primarily two results are obtained in ANSYS, total deformation and maximum von-Mises stress. Based on these results, the optimum design is selected.

## IV. Conclusion

From sizing optimization method, the design is modified by incremental iteration approach. For 250
W. of rib height, the FEA results were obtained. It is found that Iteration-3 is optimum design and has deformation under desired values. Also the maximum von-Mises stress for that design is less than the ultimate tensile stress of the material, so this design is safe.

## References

[1] Akio Nagamatsu,Park Sok-Chu, Tetsu Ishii, " Vibration analysis and structural optimization of a press machine," Finite Elements in Analysis and Design ,Volume 14,Page 297-310

[2] Yuefeng Li, Tieqiang Wang, "The Structural Static Analysis of Four-Column Hydraulic Press," in international conference on mechatronic and automation: proceedings of IEEE-2015,Aug 2 5,Beijing,China

[3] Pedro G Coelho, Luis O Faria, Joao B Cardoso, " Structural analysis and optimization of press brakes", machine tools & manufacture, 45 (2005) 1451-1460

[4] Liao shanmei, Zhang Zhichen "Analysis of the Upper Cross Beam of a forging hydraulic press," in international conference on industrial mechatronic and automation, IEEE-2010, Tianjin,China

[5] Li yancong, wan shengmou, Liu Yule, Song Xin, "concept design of movable beam of hydraulic press",ICMME 2017,95

[6] Wenzhu Wang, Dong Du, Rendong Wu, Chaolong Yuan, Baohua Chang, "Co-simulation research of the balancing control of the moving beam of a heavy hydraulic press during the die forging process" in international manufacturing science and engineering conference: proceedings of ASME-2017, June 4-8,Los angeles,CA,USA

**M183**

# Design features of Multistage Centrifugal Pumps used in ISBL of Modern Urea Plants

Sourabh Narayan Sane
Department of Mechanical Engineering
Flora Institute of Technology
Pune, India
snsane1979@gmail.com

**Abstract: India is the country of farmers. But still we are one of the largest importers of urea fertilizer which is essential commodity to our farmers. To overcome this dependency and country's commercial drain, Indian government has launched three (3) major gas-based Ammonia-Urea fertilizer plants of 1.27 MTPA capacities each, by forming a company named HURL, to be commissioned by year 2020. With above drive, it is the interest of many parties with various perspectives to know technicality of machinery involved in urea fertilizer complex.The paper is focusing on special design features of highly engineered multistage centrifugal pumps applied in ISBL of urea fertilizer plant. After briefing on plant battery limits, equipment list segregation and critical pumping applications; the paper comment on historical movement of pump type (reciprocating to centrifugal) in urea fertilizer plant's critical pumping services.Prime topics covered in this paper are: special construction features of ammonia and carbamate pumps, their material of construction, bearing types and sealing requirements for continuous uninterrupted pumping. The auxiliaries like drives, equipment train and lubrication systems will be partially addressed.The other practical aspects like equipment manufacturers' data, lead time, sub-vendor listing and costing will be broadly discussed.**

## 6. INTRODUCTION

Urea plant capacity has continually increased since its historical establishment of 1800MTPD capacity production processes in the late 1940s. Until 1990s 2200MTPD grass roots urea plants were the largest. However, nowadays most fertilizer projects are aiming at larger urea capacities ranging to 2600 ~ 3250MTPD or even larger. Considering the recent trend and viability, urea plant of larger capacities over 3500 MTPD will come-up sooner or later. To serve such demand, the aspects need to be verified are: Process Scale-up Approach, High Pressure Vessels, Rotating Machinery, Piping and Control Valves, Transportation & Erection, Process Performance & Economics; and finally Single Train or Double Train option.

In the following paragraphs we will specifically discuss on 'High Pressure (HP) Ammonia & Carbamate Pumps' covered under critical Rotating Machinery. Battery limit is a boundary condition which outlines the work to be done by a particular entity (the entity can be engineering contractor, process licensor, equipment supplier (Vendor) or Sub-Vendor). If a Customer (such as End Users like a refinery, a fertilizer & petrochemical complex, power plant) asks an engineering contractor to carry out some work in the plant then battery limits need to be defined in order to determine scope of work and to have clear understanding on responsibility matrix.

Battery limit is generally physical object (e.g. a flange on a pipe node); or can be represented by a map coordinate. Two (2) main terminologies used to define battery limits are InSide Battery Limit (ISBL) and OutSide Battery Limit (OSBL).

All the machinery and equipment, construction commodities (piping, instruments, electrical, etc.), and buildings related to main process and prone to major operational & safety hazard are designated as ISBL.

All the utilities, ancillaries and other technical things (like Effluent Treatment Plant etc.) which are used to create a complete system are covered under OSBL.

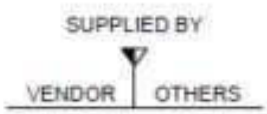


Fig. 1. Example of a Battery Limit

## TT. EQUIPMENT LIST SEGREGATION

Any industrial plant has variety of machineries. An 'equipment list' consists of the details of all the machines required to operate in plant; either in continuous, intermittent or stand-by mode. Equipment list, as a minimum, shall include the name, type,

application, duty parameters and location of equipment installed in the plant. Broad segregation of equipment list is Rotating Equipment (Pumps, Compressors, Turbines etc.) , Static Equipment (Tanks, Columns, Heat Exchangers etc.), Package Equipment (Air Conditionin

ystem, Material Handling Facilities etc.) and Other (Furnaces, free-design systems, if any etc.).

## IV. Critical Pumping Applications in Urea Plant

Following are the Critical Pumping Applications in Urea Fertilizer Plant:

K. HP Carbamate Pump
L. HP Ammonia Pump
M. Semi Lean Solution Pump
N. Lean Solution Pump
O. HP Boiler Feed Water Pump (HP BFWP)

They are inherently critical due to below parameters:

O. *Operation:* Designed to last from 10 to more than 25 years,according to the operating conditions, without major overhaul and it is usually not spared. Therefore very high reliability is essential.
P. *Application:* Nature & Properties of the Liquids to bepumped
Q. *Duty Condition:* Moderate flows (m^3/hr) with very highhead (m) or delivery pressures (bar)
R. *Rotational Speed:* Operating at very high speed like 5000~ 7000 rpm
S. *Basic Equipment Design:* Highly Engineered
T. *Manufacturing:* Specialized techniques with specialmachines by trained operaors using fixtures
U. *Long trains with Custom made Auxiliary Packages*

In the following the sections HP Carbamate Pump and HP Ammonia Pump are addressed. The same criteria broadly govern to Semi Lean Solution and Lean Solution pumps. HP BFWP is common item for Power Plants, Refineries and Fertilizers. Its system being different, it is beyond the scope of this paper.

## Historical Change-Over in Pump Type

Originally each urea plant had two reciprocating Pumps feeding carbamate solutions into the reactor. As the plants grow larger in production capacity (requiring pumps to deliver big flows at high heads); reciprocating pumps exhibited their strong limitations to cater to such pumping duties. Besides, with the Reciprocating pumps' other main and recurring problems are complicated control, delivery pulsations, long maintenance schedules (consuming higher labor costs), frequent wearing out parts, lengthy bill-od-material (leading to higher inventory), and larger foot prints.

So, in the plants that constructed typically from mid 1990s, the centrifugal multi-stage pumps are employed.

## VI. Special Features

which is carbamate solution and liquid ammonia in this case; and pumping parameters.

Carbamate solution is a corrosive liquid. Carbamate is produced as an intermediate in the production of the commercial commodity urea. It has the characteristic of easy crystallizing at just higher than atmospheric temperature.

Liquid ammonia (NH3) used in ammonia-urea fertilizer plants has the specific gravity of 0.6 with low lubricity having pungent smell. It may contain small solids from depending on NH3 synthesis process.

Typically pumping parameters are as follows:

| Pumping Fluid | Flow m^3/hr | Head m | Rotating Speed rpm | Driver Rating Mw |
|---|---|---|---|---|
| Carbamate | 180 ~ 275 | 3000 ~ 4000 | 6800 ~ 7600 | 2.5 Approx. |
| Ammonia | 120 ~ 167 | 1080 ~ 2150 | 5000 ~ 8000 | 1.2 Approx. |

Typical pumping parameters for HP Carbamate and HP Ammonia Pumps

### a) Pump Construction:

In view of above duty parameters, selecting the type of pump casing construction plays major role in trouble-free pump running and easy pump overhaul at site.

Considering the properties of carbamate solution, single casing having segmental construction using diffusers (ring section type casing) has proved the most suitable option up till, for carbamate pumping.

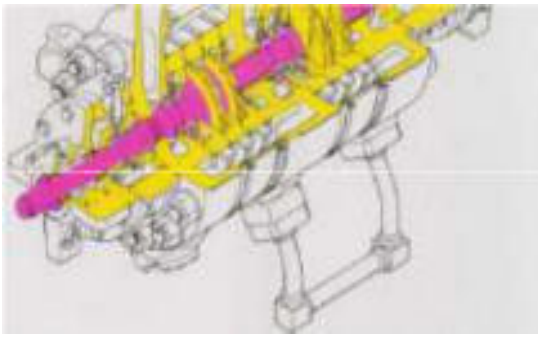

To have a sound understanding on special pump features[a], we have to first understand the properties of pumping liquids,

Fig. 2. Cut-section view of a typical HP Carbamate Pump

Such kind of segmental casing construction can be disassembled easily and then each small part can be cleaned up quickly.

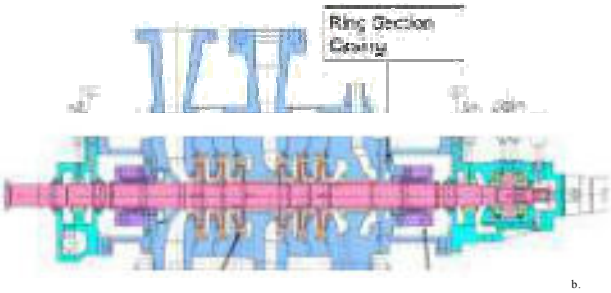


b.

Fig. 3. Cross-section drawing of a typical HP Carbamate Pump

If crystallization occurs due to the scenario like an emergency trip in urea plant, the axial split construction cannot be disassembled in parts easily.

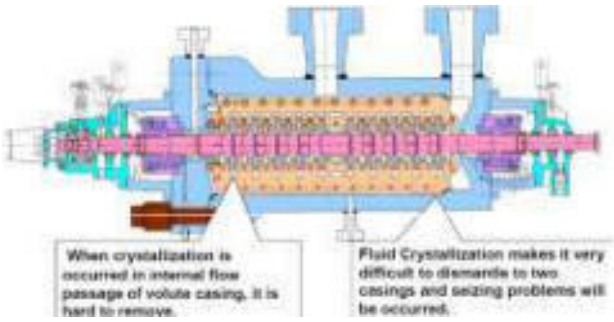


Fig. 4. Cross-section drawing of a typical HP Carbamate Pump

There are high chances of damage during disassembly and clean up for axial split designs.

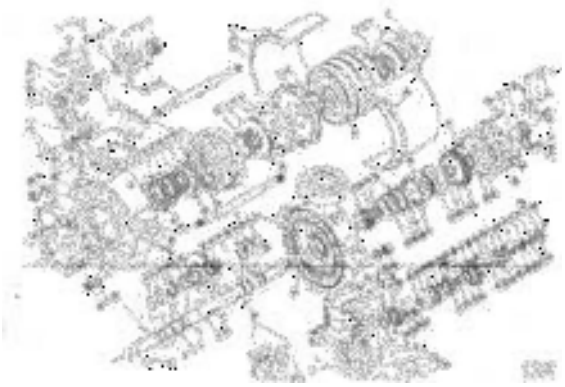

c.

Fig. 5. Illustration: Ease of disassembly and cleaning for ring-section design

Crystalized carbamate is very difficult to remove if casing is volute type or barrel type because volute has complex structure of inner casing and pulling cartridge assembly from barrel type pump is tedious task next to impossible when crystallization occurs.

On the other hand, double-casing, radially split, multistage, between-bearings pumps (barrel type construction) are the most proven designs for ammonia high pressure pumps.

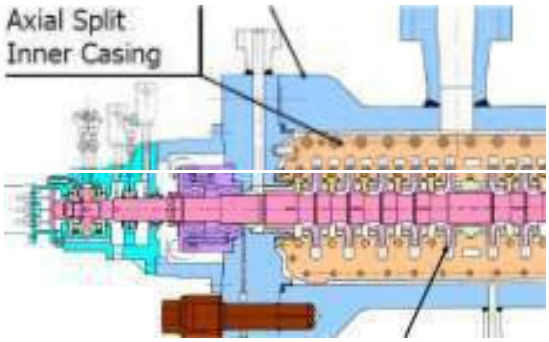


d.

Fig. 6. Cross-section drawing of a typical HP Ammonia Pump

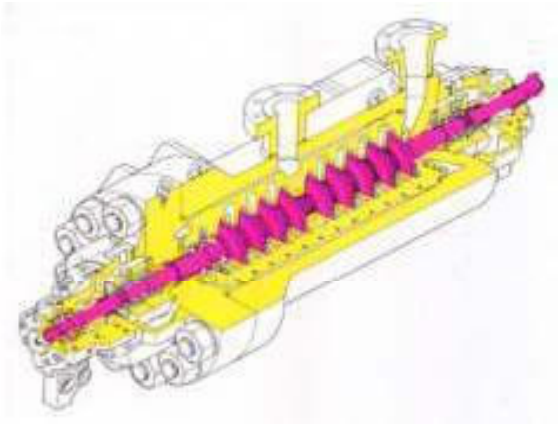

e.

Fig. 7. Cut-section view of a typical HP Ammonia Pump

Impellers have back-to-back arrangement. This arrangement balances axial thrust leading to reduced bearing size. Temperature rise in balance chamber is lower. Other benefit of back-to-back design is increasing of running clearance do not affect the axial thrust.

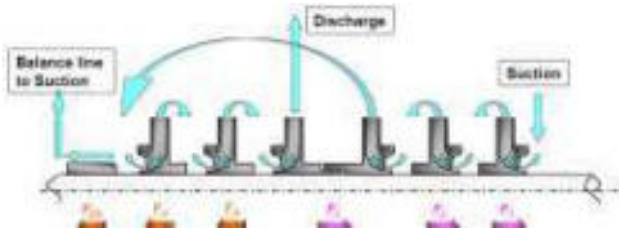


f.

Fig. 8. Illustration: Axial thrust balancing by back-to-back arrangement

*b) Material of Construction [ MOC ]*

High grade premier quality stainless steel is essentially required as the pump MOC for HP Carbamate pump. Duplex stainless steel shall be adopted as MOC for the main pump components like casings (suction, discharge, intermediate), impellers, shaft and seals. ASTM A351 CD4MCu is the proven grade of duplex stainless steel for the HP Carbamate pumps. Its properties like the best corrosion resistance, superior yield strength, and combines good ductility with high hardness, good resistant to stress corrosion cracking make it better choice among available metallurgy. Austenite stainless steel can be used as an option to duplex stainless steels, but majority of process licensors prefer duplex steel. Although duplex and some austenite steels do have similar alloying elements, duplex steel have higher yield strength and greater stress corrosion cracking resistance to chloride than austenitic stainless steels.

As the MOC for HP Ammonia pump, outer casing in carbon steel (ASTM A216 Class4), inner casing and impellers casted in 12% chrome steel (CA6NM) and shaft in 12% chrome steel ( ASTM A276 type 410H ) is the suggested and field proven metallurgy.

*L. Sealing*

Ammonia and carbamate feed pumps use specially engineered mechanical seals. The designs and materials of floating (rotating) ring and stationary ring are distinguished than that of non-engineered mechanical seals to withstand high pressure. In the non-engineered general purpose mechanical seals are used, the distortion of the outside seal face is caused due to high pressure. The popularly used material combination in general purpose mechanical seal, which is 'Carbon (C) for rotating ring' Vs 'Silicon Carbide (SiC) for stationary ring'; cannot sustain to high pressure sealing requirements of ammonia and carbamate feed pumps. Under high pressure operating conditions, carbon gets worn-out against hard SiC and the wedge shaped clearance if formed causing the leakage. Hence, 'special SiC with symmetrical floating ring design' suitable for high Pressure-Velocity (PV) values, gives the utmost guarantee for a reliable sealing and uninterrupted pump service.

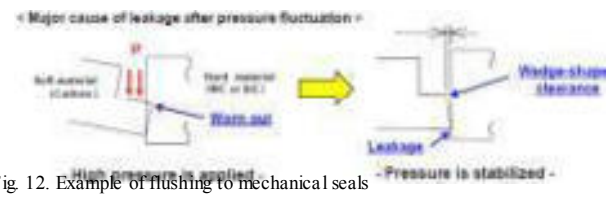


Fig. 12. Example of flushing to mechanical seals

Fig. 9. Leakage phenomena due to high pressure condition

Typical flushing arrangement for inboard (pumping liquid side) seal is as shown below:

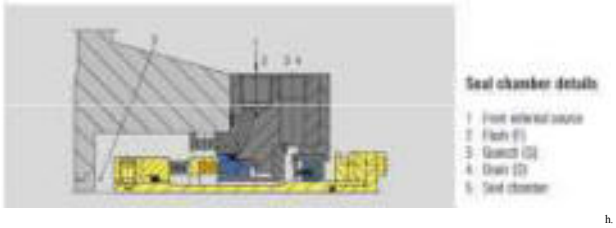


h.

Fig. 10. Typical flushing arrangement for inboard seal

Typical flushing arrangement for outboard (atmosphere side) seal is as shown below:


i.

Fig. 11. Typical flushing arrangement for outboard seal

To keep the mechanical seal functioning properly, it shall be provided with good working environment. This is achieved by a 'seal flushing system'. A seal flushing plan is a strategic equipment arrangement, as shown in Fig. 10 and Fig. 11, that circulates fluid to-and-or-from the seal chamber in order to maintain proper lubrication, pressure, temperature, and solids management. Steam Condensate at the temperature 40 to 50 Deg.C at operating pressure matching to (pump's normal suction pressure + 2 bar) is used as sealing media. A dedicated seal water supply unit is designed that provides barrier liquid circulation and cooling even though pump is standby mode. Pumped fluid may become contaminated but never leaks to atmosphere unless pressure is lost. Hence, the system should be properly engineered.

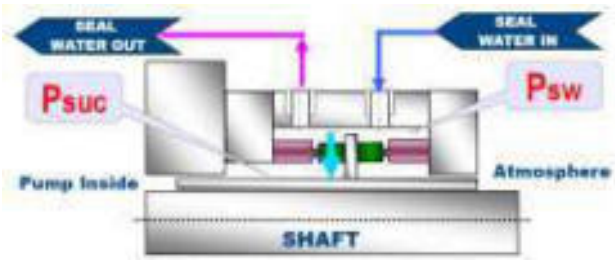


j.

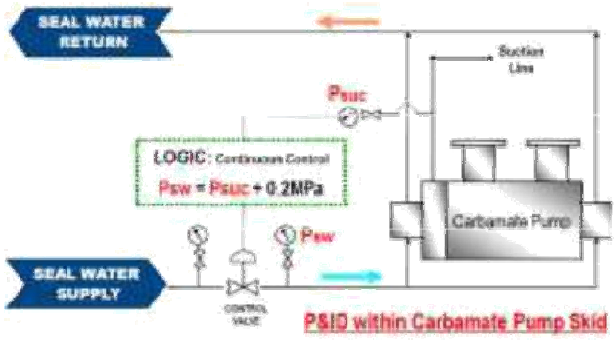


Fig. 13. Typical P&ID for mechanical seal flushing

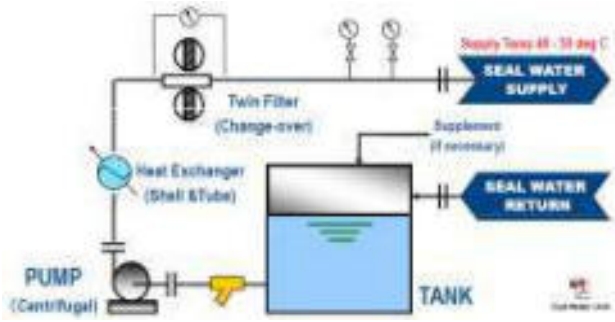


Fig. 14. Schematic for seal water supply unit

Fig. 15. Actual photo of seal water supply unit at Vendor shop

- ***Bearings***

Tilting pad thrust bearing in combination sleeve type radial bearing are supplied with forced feed lubrication to provide the axial and radial positioning while permitting the rotation of shaft at very high speed. Considering the high speed operational requirement under high discharge pressures; tilting pad thrust bearings are the preferred choice of thrust bearings due to their increased support area to accommodate axial loads and utility to adjust to varying conditions during operation.

Tilt pad thrust bearings are designed to transfer high axial loads from rotating shafts with minimum power loss. Pad geometry, movement capability of pad, material and clearances are crucial design parameters to contribute uninterrupted pump running in the fertilizer plant. Each bearing consists of a series of pads supported in a carrier ring (retainer). Each pad is free to tilt resulting in a self-forming hydrodynamic film. The carrier ring may be in one piece or in halves, and the size and number of pads are selected to suit the operating conditions.

Sleeve bearings are made of metal alloys or steel-backed PTFE lining.

## VII. Bought-Out Auxiliaries

HP Carbamate and Ammonia pumps designed with long complex drive trains. Pump drivers either an electric motor or a steam turbine is the main bought-out equipment. Gear box is used to step-up the speeds from motor rotational speed to required pump speed (from 2980 rpm to 7000 rpm or so). The spacer type flexible couplings are used to connect the machines.

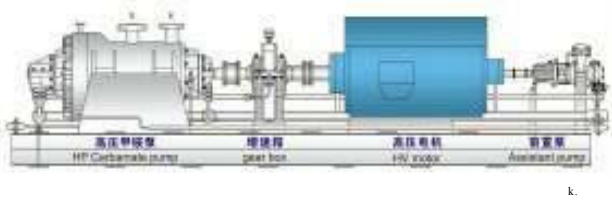

Fig. 16. Typical HP Carbamate Pump train

Forced feed Lubrication Oil Unit (LOU) provides lubrication to pump, driver and gear box. Upon feasibility, the drive train can also incorporate a Hydraulic Power Recovery Turbine (HPRT). IFFCO-India is running such trains in their plants. Dedicated Machine Monitoring Systems (MMS) available locally at equipment and the same also connected to plant's centralized control room ensure health of the machines and raise the indication to carry preventive maintenance or trip the machine under unfavorable running conditions due to process upsets.

## VIII. The Manufacturers

| Pumping Application | Established Manufacturers |
|---|---|
| HP Carbamate Pump | Ebara, Flowserve |
| HP Ammonia Pump | Ebara, Flowserve, GE NP |
| Semi Lean Solution Pump | GE NP, Flowserve, Ebara, Sulzer, KSB |
| Lean Solution Pump | |
| HP BFWP | KSB, Sulzer, Flowserve, Ebara, Torishima, GENP |

Leading manufacturing companies for critical pumps

## IX. The Sub-Vendors

| Type of Equipment | Established Manufacturers |
|---|---|
| Driver – Electric Motor | CGL, ABB, Siemens, TEMAC, |
| Driver – Steam Turbine | Elliott, Triveni, Dresser |
| HPRT | Ebara, Flowserve, KSB |
| LOU | Enpro, Southern |
| Gear Box | Lufkin, Ebara, Voith, Triveni |
| MMS | Bently Nevada |
| Mechanical Seals | EagleBurgmann, Flowserve, John Crane |

Main suppliers of auxiliaries required for HP Carbamate & HP Ammonia Pumps

## X Budgets and Schedules

The design philosophy of critical equipment shall be based on the myth that no economy is required that will compensate the safety of operation and environment hazards. Acceptable quality of MOCs, manufacturing, testing and commissioning practices are not to be sacrificed to obtain lower investment. As such, the equipment under the discussion is high price capital machines. The sanction of budget is based on approvals to feasibility studies. A single drive train is typically costing to 10s of Lakhs INR to a Crore INR. Looking at the criticality involved in design, engineering and manufacturing typically the machines discussed above are categorized as Long Lead Items (LLI) in any project schedule. The agreed contractual deliveries in most of the cases are within 18 months from the date of ordering.

## Acknowledgment

Author would like to express deepest gratitude to various Indian fertilizer plants' authorities who granted the permission to visit the actual pump installation at sites and shared the factual information during the interviews which has made author confident to write this paper. Author is thankful to practicing engineers at consultants, application engineers of manufacturers and maintenance personnel at site who gave valuable input for this publication.

## References

[1] Uhde's Key Design and Execution Features in Recent Urea Plants : 10th Stamicarbon Urea Symposium

[2] Mega-capacity Urea Plants – TEC's Approach : Paper by H. Morikawa, E. Sakata, Y. Kojima, G. Nishikawa, Toyo Japan

[3] Baling-Hengyi Petrochemical's Caprolactam Project www.maintenance.org

[4] CASALE Ammonia Technical Manual

[5] Complete Guide to Plans for Mechanical Seal – EagleBurgmann

[6] Ebara Pump Handbook

**M187**

# Plate Type Drill Jig

C.Palanakar[1], P.Patil[2], N.Sasane[3], Proff.K.Powar[4]
DEPARTMENT OF MECHANICAL ENGINEERING
D. K. T. E. SOCIETY'S TEXTILE AND ENGINEERING INSTITUTE,
ICHALKARANJI,MAHARASHTRA, INDIA

**Abstract— Jig designed is depicted by so many other, however fig designed itself having innovation area for various components. In relation to the work pieces these guide bushes are not essential but these prove to be economical and technically desirable .The position of the jig into which the harden bushes are fitted is called bush plate. Drills bushes are provided in the plate to guide the drill. The work piece can be clamped to plate and holes can be drilled. The plate jig are employed to drill holes in large parts, maintaining spacing in each other.**

***Keywords***—*drill bushes, plate jig.*

I. Introduction

The Machine technologies, high-performance advance technology are making todays industries to make better than ever before. So the jig method also advanced considerably,
However the basic principle of clamping the work piece .Jigs are provided to convert standard machine tools into specialized machine tools. They are usually associated with large-scale production by semi-skilled operators, but they are also used for small-scale production when inter changeability is important and by skilled machinists when the work piece is difficult to hold without special equipment. Limit gauges are also used when acceptance or rejection is required rather than actual measurement, and inspection fixtures are used when the positions of holes and faces, etc.[1]

II. Information

## A. plate type jig

Plate jigs have built in clamps to hold the work .These jigs can also be made with or without bushing depending on number of parts to be made Plate jigs mainly consist of single bush plate with a provision for location and clamping of work piece .So the drill bushes guide the drills Plate jig are employed to drill holes on large part maintaining accurate spacing with each other.[2]

ADVANTEGES:
1] Minimal design
2] Fabricator time

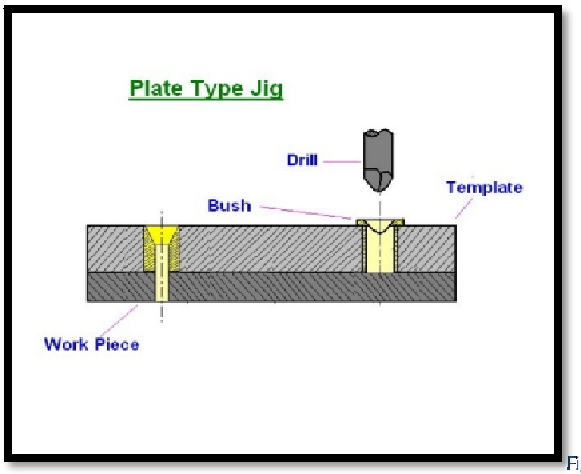


Fig.1.Plate type jig

## B. Drilling Bush

A drill bushing, also known as a jig bushing, is a tool used in metalworking jigs guide cuttingtool most commonly drill bits. Other tools that are commonly used in a drill bushing include counter bores, countersinks, and reamers. They are designed to guide, position, and support.[4]

The types of bush as show fig.

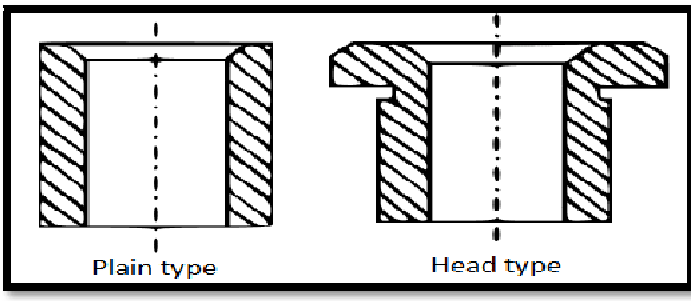


Fig.2.Bush

*C. 3-2-1 Principle*

In order to study complete location of work piece within a jig .Let us consider a work piece in space as show in fig A .A work piece is assumed to have true and flat face .In state of freedom it may move in either of two opposite direction along 3mutualy perpendicular axis X-X ,Y-Y and Z-Z. These 6 moments are called "moments of translation" also the work piece can rotate either of two opposite direction around each axis .Clockwise and anticlockwise these 6 moments are called as "rotational moments". The sum of these two types of moments give a 12 degree of freedom of work piece on space confine the work piece accurately and positional on another fixed body " the moment no of work piece of 12 degree of freedom must be rested for this let us refer fig.3[3]

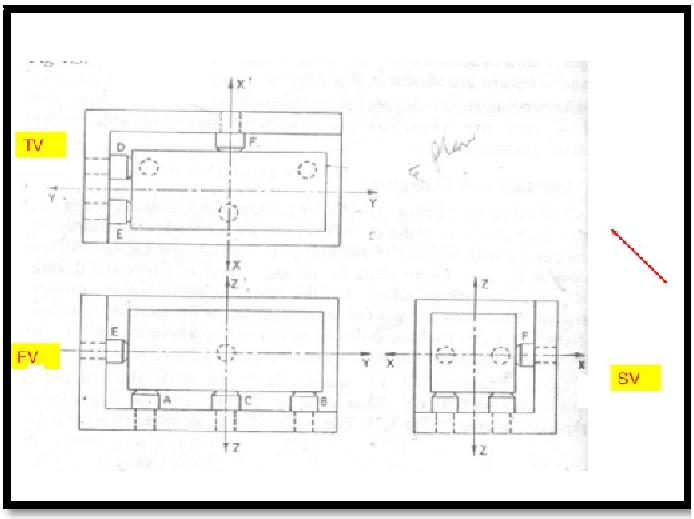


Fig.3. 321 principle

*D. Poka-Yoke*

Poka-yoke can be implemented at any step of manufacturing process where something can go wrong or an error can be made

For given- The jig that holds pieces for processing might be modified to only allow pieces to be held in correct orientation or a digital counter might track of number of spot welds on each piece to ensure that the worker executes the correct number of welds

Shigeo Shingo recognized three type of poka –yoke for detecting preventing error in a mass production

1. The contact method identifies product defects by testing the product defects by testing the product shape , size ,colure or other physical attributes
2. The fixed value method alerts the operator if a certain number of movements are not made.
3. The motion –step method alerts the operator if a certain number of movements are not made.[5]

Benefits-

A typical feature of poka- yoke solution is that they don't let an error in a process happen but that is just one of their advantages .

*Less time spent or training workers
* Elimination of many operations related to quality control
*Unburdening of operators from respective operations
*Promotion of work improvement oriented approach and actions
*a reduced number of rejects
*Immediate action when a problem occurs
*100% built in quality control

*E. Design of object*

3D modeling of jig plate and bush

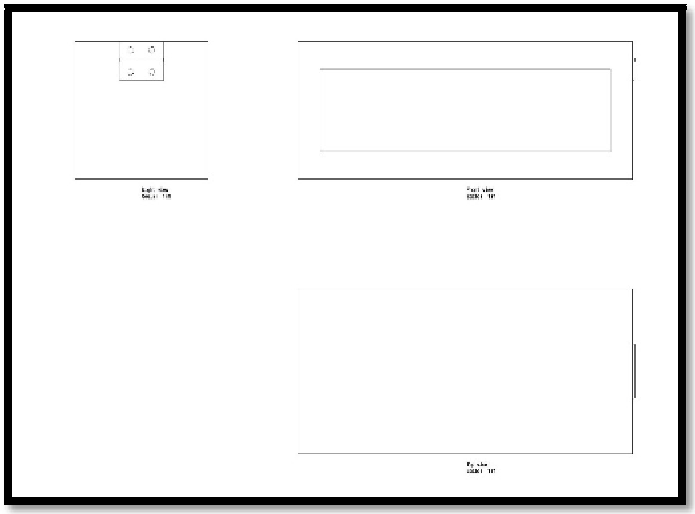

Fig4. Catia design

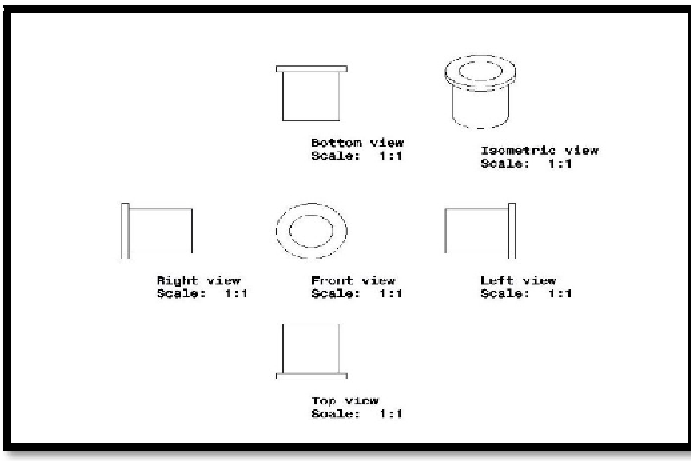


Fig5. Bu

\

## III. Conclusion

From this explicit we made our drilling operation in the work piece as easy and comfortable. Design done on catia is easy to understand.It provides more accuracy in the work piece while drilling operation. It is really a very good experience for every one of us. This project will be very economical and a useful product.

## IV. References

[1] 1.“Production Engineering”, Dr.PcSharma,1th addition.1999.

[2] “Jig and Fixture Design”, Hamad Mohammed Abouhenidi, International Journal of Scientific and Engineering Research. February-2014.

[3] 3.“Design and Development of a Fixture for VMC Operation”,S.B.Manali etc International Journal for Engineering Application and Technology. June-2015.

[4] 4..“Design and Fabrication of Jig and Fixture for Drilling Operation”, Midhun.R &Vignesh.A,International Journal for Scientific Research and Development, December-2016

[5] “Review on Poka Yoke: Technique to prevents defects”,Midhun,International Journal for Engineering Sciences & Research Technology., November-2015.

[6] “Design of Bush Mounting Fixture with Critical Part Analysis, Ishwar D. Gavali, International Journal of Innovation in Engineering and Technology.June-2016

**M189**

# DESIGN AND FABRICATION OF LUMP CRUSHER FOR CHEMICALLY BONDED NO BAKE SAND

Onkar M. Bhoi [1], Harshad K. Kulkarni [1], Vinod S. Madde [1], Sudhir S. Amale[1], Vasudev D. Shinde[2]

U.G.Student [1], Professor in mechanical Engineering [2],

Department of Mechanical Engineering, DKTE's Textile and Engineering Institute, Ichalkaranji (INDIA)

***Abstract*:**

**With the advent of automation and to remain in the global competition, the industries are installing various types of equipment to achieve customer demand. So, the production must be quickly, economically and accurately done for better customer satisfaction. This calls for automated equipment's which will satisfy customer requirement with economical. This paper includes the design and fabrication of lump crusher for chemically bonded no bake sand. Lump crusher is one of the major size reduction equipment that is used in foundry industries. There are varieties of equipment in use that are applied for reducing lump material to a usable partical size with consistency. The paper includes designing of horizontal shaft impact crusher for 20 Kg sand capacity per batch. In order to avoid environmental degradation, the lump has to be reused. The designed system plays important role in sand reclamination. The mechanism applied here is of impact loading where the time of application of force is less than the natural frequency of vibration of the body**.

*Key Words: No bake sand, Binders, AFS Number, Impact force, Hammer mechanism, Customer satisfaction*

## I. INTRODUCTION

There are varieties of equipment in application that are used for reducing lumps to a usable consistency. The lumps of sand are chemically bonded together just after being broken from the mold or casted part. It can be reduced to a granular texture for its immediate reuse in the formation of a mold for further is casting. Lump crusher reduces the lumps to smaller pieces which are in turn reduced to particulate matter in preparation for reuse.

A crusher is a device that is designed to reduce large solid chunks of raw material into smaller chunks. A crusher can be considered as primary, secondary or fine crusher depending on the size reduction factor.

## II. CLASSIFICATION OF CRUSHER

**1. Primary Crusher:**

The raw material from mines is processed first in primary crushers. The input of these crushers is relatively wider and the output products are coarser in size.

Example - Jaw crusher, Gyratory crusher, Impact Crushers, etc.

**2. Secondary Crusher:**

The crushed rocks from primary crusher are sent to these secondary crushers for further size reduction.
Example:-reduction gyratory crusher, Cone crusher, disk crushers etc.

**3. Fine Crusher:**

Fine crushers have relatively small openings and are used to crush the feed material into more uniform and finer product.
Example - Gravity stamp

| | | | | |
|---|---|---|---|---|
| | | | | |
| | | | | |
| | | | | |
| | | | | |

*Table No. 1: Comparison between different types of crusher*

## III. IMPACT CRUSHER

The impact crusher involves the use of impact rather than pressure to crush materials. Here the material is held within a cage with openings of the desired size at the bottom to allow crushed material to escape through them. Here the breakage can take place in a much shorter scale compared to fragmentation process used in cone or jaw crushers.

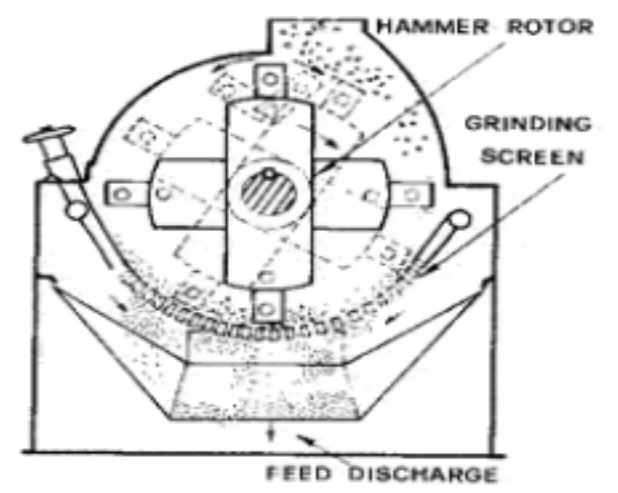


*Figure 1: The mechanism of Impact Crusher*

An impact crusher is classified based on the type of arrangement of the impact rotor and shaft as:

1. Horizontal shaft impact crusher
2. Vertical shaft impact crusher

## IV. HORIZONTAL SHAFT IMPACT CRUSHER

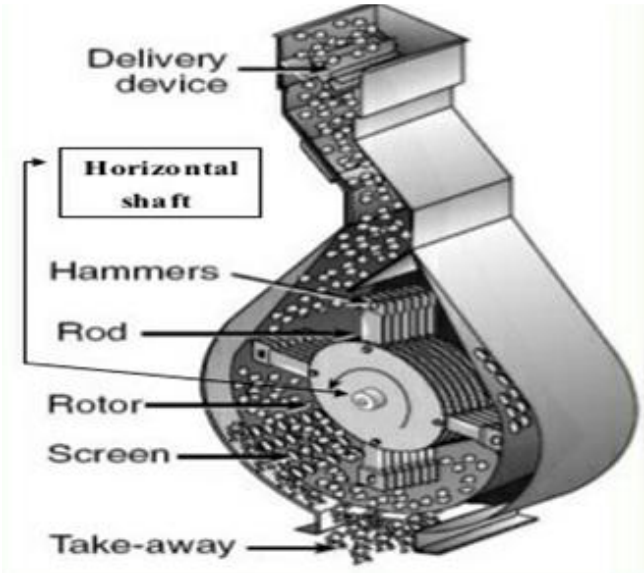


*Figure 2: Mechanism of Horizontal Shaft Impact Crusher*

The horizontal shaft impact crusher break rock by impacting the rock with hammers/blow bars that are fixed upon the outer edge of a spinning rotor. Here the rotor shaft is aligned along the horizontal axis hence it is called horizontal shaft impact crusher. The input feeded material hits the rotating hammers of the rotor and due to this sudden impact it breaks the material and further breaks the material by throwing it on to the breaking bar/anvils. These have a reduction ratio of around

10:1 to 25:1. Thus they are used for the extracted materials, sand, gravels etc.

Here the feed material is crushed by highly rigorous impacts originating in the quick rotational movement of hammers/bars fixed to the rotor. The particles are then crushed inside the crusher as they collide against crusher parts and against each other, producing finer, better-shaped product. Adjusting the distance between impact frame and rotor frame, we can change the shape and size of the output. In an impact crusher, the breakage takes place in a lesser time span as compared to the conical or jaw crushers. So here the nature and magnitude of forces as well as the energy dissipated due to impact breakage is different from that of the relative slow breaking that occurs due to compression or shear in other type of crushers.

### 1. Operating Principle:

The impact crusher rotor revolves in fixed direction by means of driving action of triangle belt that connects with motor. Above rotor, there are sets of suspended impact plates. Material enters into the crushing chamber through the charging hole and feeding guide plate. The blow bars fixed on rotor strikes the feed material onto impact plate and then fall from it to mutually shock material blocks. Therefore, material will be moved recurrently and repeatedly in the crushing chamber that is composed of rotor, impact plate/ anvils, hammers/ blow bars , by means of which intense shock phenomenon will act predominantly, and the material will be crushed along its natural crack and hence bulge. The gap between impact plate and hammer/blow bar can be adjusted according to practical requirement by adjusting the angle and distance of the impact anvils. Product output is easily controlled by varying the rotor speed, input feed rate and the grinding screen configuration.

## V. PROBLEM DEFINATION

Metal casting is a primary manufacturing process for producing intricate parts for any metal that can be melted. Both ferrous as well as non-ferrous foundries are considered to be the major sources of hazardous air pollutants (HAP's) from processes such as melting, pouring, cooling, and shakeout.

In order to avoid this environmental degradation, the lump has to be reused. The sand used for the mold cannot be reused in other sand casting process. Hence the lump crushers are designed. Due to lump crusher, the sand can be broken down, cooled and filtered to be reused. The reclaimed sand is then mixed with a large amount of fresh sand in order to make a new no bake sand mold.

## VI. EXCISTING METHOD

### 1. Knockout (Shakeout):

When the molten metal in a mold has solidified to a point where it will not distort when removed from the sand, the casting is removed from the flask in an operation is called knockout or shakeout. Except for those molds produced without flasks or bottom boards, this procedure consists of opening the flask or mold frame and removing the casting. Usually the casting is then cleaned in the shakeout operation, which involves shaking off adhering sand and binder materials from the casting and sometimes breaking out the cores. The castings are then taken to the cleaning department and the flasks and sand are returned for recycling. These operations generally produce dust, and a green sand knockout gives off steam as well as dust. The shorter the interval between pouring and knockout, the larger the amount of steam but the smaller the quantity of dust is liberated.

*Figure 3: The sand lumps produced after Knock Out*

### 2. Vibrator Method:

In this method, after solidification of casting the mould boxes are taken to the vibrator. The vibrator vibrates the lumps, so that lump crush into small parts .But these vibrators are less effective. These are used to crush only some specific moulding sands.

*Figure 4: Vibrator Mechanism used for sand crushing*

## VII. PROPOSED DESIGN

### 1. Design Parameter:

- Design for 20 Kg of sand lump.
- Design for minimum power requirement.

- Design for minimum geometric parameter.

## 2. Proposed Method:

The general layout of system is shown below

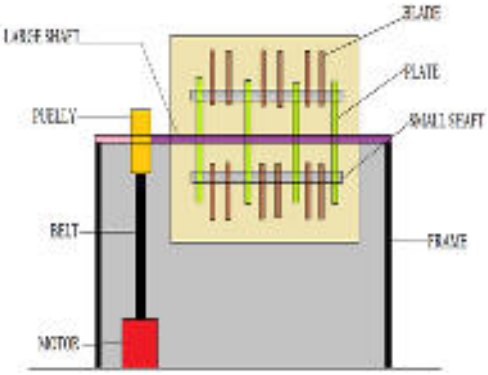


*Figure 5: System Layout of sand crusher*

The crusher design is done in such a way that even a layman can operate it. The current lump crusher uses belt and pulley driven mechanism to produce high crushing force which in turn crushes the sand lumps .The construction is simple .The manufacturing cost as well as the maintenance cost is very less as compared to other machines. The proposed design can crush the lumps effectively and also the operating time is very less as compared to the existing ones. This crusher would best suit the small recycling plants and small industries.

## 3. Components:

The different components of the lump crusherare listed below:

| Sr. No. | Component | Specification | Quantity |
|---|---|---|---|
| 1 | Drum | 580*580 mm | 1 |
| 2 | Crusher Shaft | Φ=50, L=750mm | 1 |
| 3 | Small Shaft | Φ=18, L=470mm | 4 |
| 4 | Blades | L= 145mm | 24 |
| | | W=40 mm | |
| | | H= 20 mm | |
| 5 | Plates | 330*330*6mm | 4 |
| 6 | Sieves | 30 &40 mesh | 2 |
| 7 | Spring | Compression Spring, L= 120mm | 4 |
| 8 | Bearing | UC210 | 2 |
| 9 | Fasteners | - | 10-20 |

Table No. 2: Basic Components and Specification of sand crusher

## VIII. CRUSHER ASSEMBLY

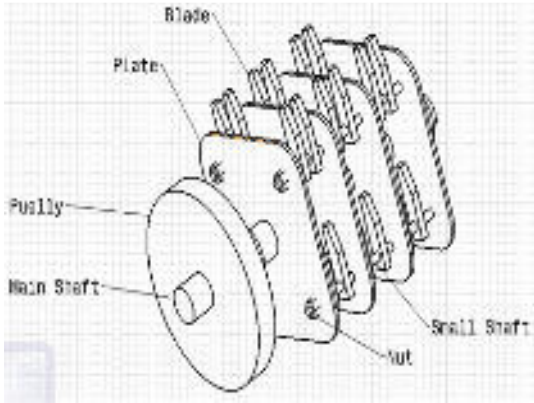


*Figure 6: CAD Model of Crushing Shaft*

Crusher assembly consists if crushing shaft, small shaft, plate, blades, and pulley. The plates are mounted on the main shaft. The pulley is attached to the one side of crushing shaft. The pulley is driven by motor through belt drive. The small shaft is attached to the plate. The blades are mounted on the small shaft. The main shaft is rotated by motor through which small shaft and blades are rotated.

*Figure 7: Inside view of Crusher shaft*

## IX. LUMP CRUSHER SETUP

***X.*** *The lump crusher consist hopper, crusher shaft, small shaft, blades, plates, sieves, bearings, and springs.The hopper is situated at the top of model. The material i.e. lumps are put inside the hopper from the opening on the hopper. The crusher assembly consist plates and blades mounted on the crushing shaft. The pulley is attached to the crushing shaft and other end to motor through belt drive. The two sieves are present at the bottom of set up.*

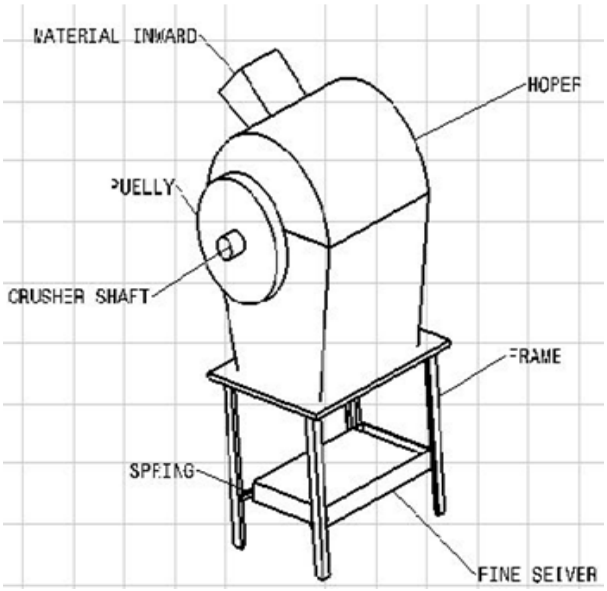


*Figure 8: CAD Model of sand crusher designed*

*Figure 9: Assembled view of Lump Crusher*

## XI. CONCLUSION

To avoid the environmental degradation, the lump crusher are designed. Lump Crusher easily disintegrates the sand lumps. The no bake sand lumps can be further used again by reclaiming it. Thus lump crusher is helpful in conserving the environment and to reduce the size of sand for required consistency.

## XII. ACKNOWLEDGEMENT

This work is funded by Department of Science and Technology, India under SMART FOUNDRY 2020 project with reference number DST/TSG/AMT/2015/332. The authors gratefully acknowledge the financial support provided under SMART Foundry project by D.S.T., government of India.

## XII. REFERENCES

[1]Senthill Kannan,***"Design of mechanical crushing machine",***IRJET, Volume: 03,Issue: 01,2016,921 -926.

[2] Nimisha Dave, ***"Concept Development of Multi Level Horizontal Shaft Impact Crusher",*** International Journal of Science ISSN-2455-018, Volume: 2, 2016,12-15.

[3] Deepak Gupta,***"Design and Analysis of Horizontal Shaft Impact Crusher"***, National Institute of Technology 769008, India, Volume: 3, page 2-5.

[4] Mehta Kashyap V,***"Optimization of Process Parameter of No bake casting",M.tech thesis,*** Institute of Technology & Science, Rajkot, May 2016.

[5] Himanshu Khandelwal, B.Ravi, **"Effect of moulding parameters on chemically bonded sand mold properties, manufacturing processes",** Journal of Manufacturing process 22 (2016) Page no127-133.

[6] V. B. BHANDARI,Mc Grawhill***, "Design of Machine Elements",***Education PVT LTD,Volume: Third Edition.

**M190**

# A Review on Design & Development of Fixtures for Automobile Components

*Ms. Padmashree S. Barge*
*M.Tech Student (Product Design & Development)*Department of Mechanical Engineering,
D.K.T.E's Textile & Engineering Institute
Ichalkaranji, Kolhapur, Maharashtra
padmashreebarge@gmail.com

*Dr. V.D.Shinde*
*Professor*
Department of Mechanical Engineering
D.K.T.E's Textile & Engineering Institute
Ichalkaranji, Kolhapur, Maharashtra
vasu.metal@gmail.com

***Abstract*—The main purpose of fixture is to hold the work piece in the proper position during a manufacturing operation. Thus, fixtures have a direct impact on machining quality, productivity and cost of product. One needs to consider the systematic study of all the approaches to get the best design of fixture. Hence there is need to review and study all the research work done in the area of design, development and analysis of fixtures in order to achieve the desired accuracy and result in machining the work piece by using most efficient method. The paper presents the wide scope of work like Multiple Fault Diagnosis, Quadratic Sensitivity Analysis, Fixture layout design of curved work pieces, Adaptable fixture design, Bayesian network of fault diagnosis, Intelligent jig and fixture design, Optimization methods to select support positions of fixture, Design and Finite Element Analysis of automobile components, etc. by various renowned authors. Finally, the paper discusses future trends and conclusion.**

*Keywords—Fixture; Automobile Components; Review;Design;Development;*

## INTRODUCTION

A fixture is a work holding or support device used in the manufacturing industry. The main purpose of a fixture is to locate, hold a work piece during either a machining operation or some other industrial process.

A fixture may defined as a device, which holds and locates work piece during an inspection or for a manufacturing operation.In construction, the fixtures comprise different standard or specially designed work holding devices, which are clamped on the machine table to hold the work piece in position. The tools are set at the required position on the work by using gauges or by manual adjustments. The following are the fundamental concepts of fixture: A fixture holds and position the work but does not guide the tool, the fixtures are generally heavier in construction and are bolted rigidly on the machine table, fixtures are employed for holding work in various machining operations such as milling, grinding, planning, or turning.

The fixtures are most versatile type of tooling. They are used at operations like Boring, Planning, Grinding, Broaching, Riveting, Welding, Upsetting, Swaging etc. Further, they are used for supporting activities like Inspection, Assembly etc. The operational timings are minimized through quick and easy loading, unloading, clamping, unclamping and aligning. The quality at production is maintained at the desired level through reliable working.Thus, fixtures have a direct impact on machining quality, productivity and cost of product. One needs to consider the systematic study of all the approaches to get the best design of fixture. Hence, there is a need to review and study all the research work done in the area of design, development and analysis of fixtures in order to achieve the desired accuracy and result in machining the work piece by using most efficient method.

## LITERATURE REVIEW

*C.A. Kubade, S.V.Patil, andV.P Patil [1]*

They have presented a study on design and analysis of welding fixture for automotive component using FEA. The fixture designed for the cabs leg sub-assembly, which welded with companion for its application. Initially they investigated the study of basics of fixture and welding, need of fixture, location principle. Welding fixtures have designed considering all the welding factors like access to its welding area, cycle time and availability of space for the fixture.

*K.Li., R.Liu.,G.Bai., and P.Zhang [2]*

They have developed an intelligent jig and fixture design system by applying artificial intelligence (AI) technology into the Computer aided fixture design (CAFD) system, using the theory of the expert system and technology of the 3D modeling. They have discussed the configuration, the general function modules, the knowledge representation, the reasoning mechanism and the standard component base of jig and fixture. In addition, they have explored the technology of intelligence and optimization in the process of the jig and fixture design. Finally, an example of virtual assembly designed by the CAFD system.

*X.Liu, M.Chao,and X. Xia [3]*

They havediscussed the design of automobile body welding fixture and analyzed it briefly. They have used MDT (Mechanical desktop) software for fixture designing which also contains the AutoCAD software. This software has access to loading many special modules, for example three-dimensional pattern, calculation function for the enterprise to carry on the design of subsequent problems like container handling for weight computation. They have also presented the process of automobile fixture design along with field installation, welding problems and testing

*R.J. Menassa and W.R. DeVries [4]*

They haveproposed optimization techniques to assist in design and evaluation of fixtures for holding prismatic work pieces. Using the minimization of the work piece deflection at selected points as the design criterion, the design problem is determining the positions of the fixture supports. Here they have developed the objective function and the method illustrated with three numerical examples.

*J.A. Camelio, S.J.Hu,andD.J. Ceglarek [5]*

They have presented a new fixture design methodology for sheet metal assembly processes. They have focused an approach on the impact of fixture position on the dimensional quality of sheet metal parts after assembly, considering part and tooling variation and assembly spring back. The optimization algorithm combines finite element analysis and nonlinear programming methods to find the optimal fixture position such that the assembly variation minimized. They have done a case study to demonstrate the design procedure.

*S.S. Pachbhai and L.P. Raut[6]*

They havepresented design and development of hydraulic fixture for machining hydraulic lift housing. The job having cylindrical shape is difficult to design and hence they have designed a special type of fixture, which can used for machining of hydraulic lift housing. They have done designing of different parts of fixture assembly, 3D modeling by using Pro-E WILDFIRE 5.0, finite element analysis of hydraulic lift housing by using ANSYS software.

*K. Barge and S. Bhise [7]*

They have presented design and development of hydraulic fixture for VMC. They have used hydraulic vertical swing clamps for holding the work piecedriven by hydraulic power pack by replacing existing hydraulic fixture. The existing fixture replaced with hydraulic fixture too save time for loading and unloading of component.

*J.S. Carlson [8]*

He hasderived a quadratic sensitivity equation, which relates position error in locators. A rigid part must uniquely positioned by tooling elements called 'locators' to introduce geometric constraints. The sensitivity equation which depends on the locator positions and the work piece geometry around the contact points can used for locating scheme evaluation, robust fixture design, tolerance& diagnosis. Numerical experiments have carried out to test the practical relevance of the quadratic sensitivity equation.

*D.Ding, G.Xiang,Y. Liu,and M.Wang [9]*

They haveproposed an approach to design a proper fixture layout for a 3D curved work piece. The problem tackled in a point set domain by discretizing the exterior surface of the work piece into a dense collection of candidate fixturing points and then searching for a small proper set of fixturing points that satisfies the total restraint of the work piece and reduces the work piece positioning error. The algorithm first randomly selects an initial set of seven fixturing points and then iteratively improves it by exchanging with the other candidate points through a best-first strategy and a randomized motion Finally the algorithm has been implemented and its efficiency has been ascertained by two examples.

*S.D.Dongre., P.V. Patil, and K.P Bhise [10]*

They havepresented the design and analysis of jigs and fixture, which used in manufacturing of chassis bracket of Bajaj car RE60 (passenger car). They have designed jigs and fixtures while manufacturing of chassis bracket and analyzed stress and strain developed in jigs, fixtures and chassis bracket. In addition, they have minimized the different problems of breakage of jigs and fixtures.

*M.V.Gandhi,B.S.Thompson, and D.J.Mass [11]*

They haveinvestigated an analytical and experimental study of fluidized- bed fixturing for adaptable fixture design. This mode of fixturing exploits the ability of these devices to change from a solid phase to a liquid phase and vice versa. They have established the design criteria for the holding ability of these fixtures and validated the proposed design by an experimental program.

*D.Gani and P.U.Raikar [12]*

They havedesigned and fabricated fixture for Support Flywheel Housing. At the time of manufacturing, it is very difficult to remove sprue, runner and gate, whichare unwanted and waste parts. Hence, they have designed fixture, which will hold the component firmly without any shake or vibration. In addition, unwantedparts from the component can easily remove. They have proved that production rate increased by using this fixture.

*S.Jin, Y.Liu, and Z.Lin [13]*

They have introduced a Bayesian network approach for fixture fault diagnosis in launch of the assembly process as

verification and correction of faults related to tooling design & installation are important in the auto body assembly process. The proposed diagnostic approach involves optimal sensor placement for the network nodes selection and structure-learning algorithm based on mutual information tests. They have illustrated the proposed Bayesian network approach by using body side assembly case. They have made a new attempt to develop an uncertainty-based diagnostic approach for the launch of an auto-body assembly process. The Bayesian network technique provides a more flexible and understandable tool while different auto-body assembly processes with different product, process and sensor locations.

## CONCLUSION

The purpose of this review is to study the trends in fixture design and development for automobile body components. There has been much research work carried out such as Multiple Fault Diagnosis, Quadratic Sensitivity Analysis, Fixture Layout design of curved work pieces, Adaptable fixture design, Bayesian network of fault diagnosis, Intelligent jigs and fixture design, Optimization methods to select support positions offixture, Design and Finite Element Analysis of automobile components, etc. by various renowned authors. These different aspects helpreader to understand the wide scope of work in fixture designing. However, there is need to developan efficient technique to refine, model and use the domain knowledge of fixture design that can assist the designer to simplify the design process and generate design ideas. Hence, future researches could concentrate on the importance of systematic and efficient fixture system.

## ACKNOWLEDGMENT

Foremost, I would like to express my sincere gratitude to my project guide Prof.Dr.V.D.Shindefor the continuous support, motivation and immense knowledge. In addition, I am thankful to H.O.D of Mechanical Engineering. Prof. Dr.V.R.Naik. I am highly indebted to my family for the encouragement, which helped me in completion of this paper.

## REFERENCES

*[1]* C.A.Kubade, S.V.Patil, and V.P Patil, “Design and analysis of welding fixture for automotive component using FEA,”in International Journal of Engineering Research and Applications, vol.2, pp. 539-546, 2016.

[2] K.Li., R.Liu, G.Bai, and P.Zhang, “Development of an intelligent jig and fixture design system,” in IEEE Journal of Computer-Aided Industrial Design and Conceptual Design, vol.7, pp.245-253, 2007.

[3] Liu Xu, Chao Ma, and Xia Xie, “Design of automobile body welding fixture,” in International Journal of Automobile and Traffic Science, vol.4, pp.1349-1353, 2012.

[4] R.J.Menassa and W.R. DeVries, “Optimization methods Applied to Selecting Support Positions in Fixtures Design,” in ASME Journal of Engineering for Industry, vol.113, pp.412-418, 1991.

[5] J.A.Camelio, S.J.Hu, and D.J.Ceglarek, “Impact of fixture design sheet metal assembly variation,” in ASME InternationalDesign Engineering Technical Conferences, vol.3, pp.133-140, 2002.

[6] S.S.Pachbhai and L.P. Raut, “Design and development of hydraulic fixture for machining Hydraulic Lift Housing,” in International Journal of Mechanical Engineering and Robotic Research, vol.8, pp.205-214, 2014.

[7] K.Barge, and S.Bhise, “Design and development of Hydraulic Fixture for VMC,” in International Journal for Research in Applied Science & Technology,vol.3, pp.174-182, 2015.

[8] J.S.Carlson, “Quadratic Sensitivity Analysis of fixtures and locating schemes for rigid parts,” in ASME Journal of Manufacturing Science and Engineering, vol.123, pp.462-472, 2001.

[9] D.Ding, G.Xiang,Y. Liu, and M.Wang, “Fixture layout design for curved workpieces,” in IEEE Journal of Robotics & Automation, vol.20, pp.157-164, 2011.

[10] S.D.Dongre,P.V. Patil, and K.P.Bhise, “Design and analysis of jigs and fixture of chassis bracket”, in International Journal for Research in Applied Science & Technology, vol.3, pp.329-334, 2014.

[11] M.V.Gandhi, B.S.Thompson, and Mass D.J., “Adaptable fixture design: an analytical and experimental study of fluidized- Bed Fixturing,” in ASME Journal of Mechanisms, Transmissions, and Automation in Design, vol.108, pp.15-21, 1986

[12] D.Gani, and P.U.Raikar, “Design and fabrication of fixture for support flywheel housing,” in International Research Journal of Engineering and Technology, vol.2, pp.147-149, 2015.

[13] S.Jin, Y.Liu, and Z. Lin , “A Bayesian network approach for fixture fault diagnosis in launch of the assembly process,” in International Journal of Production Research,vol.50, pp.6655-66

**M191**

# "Analysis and Simulation of Knuckle Joint and Turnbuckle"

Nikita Kulkarni[1], Iftesar pathan[1], Shivani lad[1], Farhana pathan[1], Sanjay sutar[2]
[1] Student, Mechanical Department,
D.K.T.E'S Textile and Engineering Institute, Ichalkaranji, India.
[2]Assistant Professor, Mechanical Department,
D.K.T.E'S Textile and Engineering Institute, Ichalkaranji, India.

## I. Introduction

In mechanical and automobile domain joints play very important role, depending upon the application the joints are used may be, temporary or permanent for power transmission or motion transfer application we generally uses temporary joints like screwed joint, cotter joint, sleeve cotter joint, universal joint or knuckle joint, turnbuckle.

Knuckle joint is a joint between two parts allowing movement in one plane only. The knuckle joint can be easily connected and disconnected. It is used to transmit axial tensile force. The construction of the joint permits limited angular moment between rods, about the axis of the pin. This type of joint is popular in machine and structure. A knuckle joint is unsuitable to connect two rotating shaft, which transmit torque.

Turnbuckle is a coupling with internal screw threads used to connect two rods lengthwise or to regulate their length or tensions. The principle of the operation of the turnbuckle is to have the screw operating clockwise and counterclockwise direction. They are more commonly made up of steel but can be forged into iron as well. A turnbuckle is a loop with opposite internal threads in each end for the threaded end of two ringbolts, forming a coupling that can be turned to tighten or loosen the tension in the members attached to the ringbolts.

Here we will be using Microsoft excel to carry out the calculations for design of knuckle joint and turn buckle, the CATIA for modeling, the simulation part will carry out using analysis software
ANSYS. The results which obtain from this will compared.

In the Microsoft excel sheet, according to the design procedure we prepared the excel sheet. In which load, materials of knuckle joint and turnbuckle are vary. And the results obtained from this, are used for selection of dimension of joint for particular applications.

## II. Literature review

Number of investigation has been done on numerical analysis of knuckle joint and its various components using Microsoft excel. Saurav Das, Vishvendra Bartaria, Prashant Pandey calculated the stresses in knuckle joint using analytical method .It was observe that, when pin diameter is changed, the load carrying capacity of pin increases. The knuckle joint proposed to develop in the study is for an applied force of 25 KN.The diameter of the pin is proposed to be around23 mm. The material of the knuckle joint is considered as mild steel grade 30c8. Based on the above, a CAD model was developed using ANSYS, commercial FEA software. In order to carry out the stress analysis, mesh was developed for the knuckle joint. The mesh consists of 64229 nodes and 4310 elements. ANSYS software was run and the stress contour, displacement contour, strain energy contour were obtained. Based on the ANSYS analysis, it shows that a pin of 23mm diameter can withstand a load of 25 KN is used. Further optimization of the diameter of pin, it depicts that a pin of 12 mm is enough to withstand a load of 25 kN. however if we use a pin of 25 mm the range of pulling load can be enhance to even 80 kN. [1]

Dinesh Shinde performs analysis of knuckle joint pin used in tractor trailer. Analysis was perform on pin under acceleration and deceleration conditions using Newton's Second Law. It was observed that the intensity of von misses stress is maximum in case of deceleration. [2]

Prof. Nitin Chandra R Patel, Patel Krishna, Thakkar Bhargava M concluded that, from analytical and graphical analysis for turnbuckle, it shows that for 10 mm rod diameter, Silicon Bronze is applicable at 5 kN load. Other materials like Medium Carbon Steel and Stainless Steel are alternatives. For 30 mm diameter, Silicone Bronze, Medium Carbon Steel and Stainless Steel are applicable under 5 KN, 15 KN, 30 N, 45 KN load. For 60 mm diameter, all materials are applicable from 5 KN to 90 KN load. If we consider stress analysis in End connections, in Eye failure due to shear is significant than tensile. In Hook, failure due to shear is higher than tensile while in Jaw, failure due to bending is noticeable. In Eye, from Silicon Bronze, Medium Carbon Steel and Stainless Steel are applicable for 10 mm and 30 mm rod diameter. While for 60 mm diameter, all materials are applicable. For Hook, Silicon Bronze, Medium Carbon Steel and Stainless Steel are applicable for 10 mm diameter up to 15 KN load while for 30 mm and 60 mm diameter, all materials are applicable for all selected loads. For Jaw, for 10 mm diameter, all materials are applicable for only 5 KN load, for 30 mm, they are preferable from 5 KN to 60 KN load and 60 mm diameter, all materials are applicable for 5 KN to 90KN load. Ultimately, it is concluded that, for lesser diameter, Silicon Bronze gives better performance while for larger diameter; Medium Carbon Steel and Stainless Steel are better option. As far as the cost is concerned, Silicon Bronze is costlier than other materials and Medium Carbon Steel and Stainless Steel are less costly and easily available for manufacturing of Turnbuckle. Hence, the later materials are most utilized in the application

Nishant Vaibhav Saxena and Dr. Rohit Rajvaidya performed study and analysis of knuckle joint with replacement of material by Teflon. It was observed parts made of composite materials are economical to produce and facilitate, cost reduction as compared to metal parts. [3]

Suraj Yadav, Sanket Benade, Sushil Angchekar, Vaibhav Dhokle performed study on Design and analysis of knuckle joint by using FEA. Knuckle joint is widely used in application various such as in automobiles and other field. So it should be strong enough, to sustain various amount of load coming on system, otherwise there is possibility of accidents. So we designed the knuckle joint pin. Modeling with gives correct design then 3D modeling carried out on CATIA & Analysis is carried out by ANSYS to find stress in the pin so we got perfect design of knuckle joint pin. Based on the ANSYS analysis, it show that pin of 25 mm diameter can be with stand load of 50 KN easily. After completing all the analysis process it is conclude that, 30C8 material having maximum permissible stress are 400Mpa and Maximum stresses developed in knuckle joint are 201MPa.So design is safe.

## III. Theory

- **Knuckle joint:**

  Knuckle joint is popular in machines and structures. It consists of following parts:

  1. Single eye
  2. Double eye or fork
  3. Knuckle pin
  4. Collar

The end of one of the rod is forged in the form of a fork while the end of the other rod has an eye, which can be inserted in the jaws of the fork.

A cylindrical pin is passed through the holes in the forks and the eye. The pin is secured in position by a split pin. Due to this type of a construction a knuckle joint is sometimes called a forked pin join.

The knuckle joint may be failed on the following three modes:

- Shear failure of pin
- Crushing of pin
- Tensile failure

Applications of knuckle joint:

- Bicycle chains.
- Tractors.
- Trusses.
- Suspension bridge.
- Valve mechanism of a reciprocating engine.
- Robotics joints.

This joints offers following advantages:

- The joint is simple to design and manufacture.

- There are a few parts in the knuckle joint, which reduces cost and improves reliability.
- The assembly and dismantling of the parts of the knuckle joint is quick and simple.

## IV. Design of knuckle joint

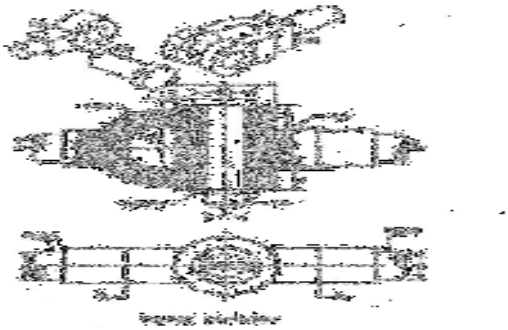

Figure 1.knuckle joint

- **Design of rod(d):**

Considering tensile failure,

$\sigma_t = P / (\pi / 4\ D^2)$……Equation (13)

Finalizing the dimensions using empirical relations:

$D_1$=1.1D……(Enlarged diameter)……Equation (14)

- **Design of pin (d):**

Considering double shear failure,

$\tau = P / 2*(\pi/4)*d^2$……Equation (15)

Finalizing the dimensions using empirical relations:

a = 0.75D……thickness of each eye of fork……Equation (16)

b = 1.25D….. Thickness of eye end of rod……Equation (17)

$d_o$ =2D……outer diameter of fork……Equation (18)

$d_1$ =1.5D….diameter of pin head……Equation (19)

- **Design of eye end :**

Check for stresses in eye end,

Considering tensile failure,

$\sigma_t = P / b*(d_o-d)$……Equation (20)

Considering crushing failure,

$\sigma_c = P / b*d$……Equation (21)

Considering shear failure,

$\tau = P / b*(d_o-d)$……Equation (22)

- **Design of fork :**

Check for stresses in fork,

Considering tensile failure,

$\sigma_t = P / 2a*(d_o-d)$……Equation (23)

Considering crushing failure,

$\sigma_c = P / 2a*d$……Equation (24)

Considering shear failure,

$\tau = P / 2a*(d_o-d)$……Equation (25)

## V.Turnbuckle

The turnbuckle is used for connecting two rods which are in tension and which require slight adjustment in the length during assembly.

The turnbuckle consists of following parts:

1. Tie rods. 2. Coupler nut.
3. Coupler.

It consists of central portion called coupler and two rods. One rod has right hand threads while the other rod has left hand threads. The threaded portions of the rods are screwed to the coupler at the two ends. As a central coupler rotates, the rods are either pulled together or pushed apart depending upon the direction of the rotation of the coupler. The outer portion of the coupler is given hexagonal shape so that it can be rotated by means of a spanner.

The possible modes of service failure of the turnbuckle are:

1. Shearing, or stripping, of threads on the loop or on one of the ringbolts.
2. Fatigue fracture of the loop or one of the ringbolts.
3. Creep strain in the loop or one of the ringbolts.
4. Fracture of the loop or one of the ring bolts as a result of excessive loading of

The system or as a result of impact loading.

## VI. Design of turnbuckle:

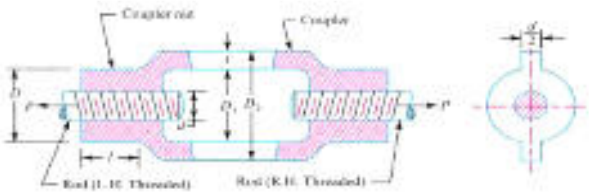

Figure 2. Turnbuckle

- **Diameter of tie rod (dc):**

To design a threaded section, design load is taken as 1.25 the normal load.

Direct tensile load,

$P_d = 1.25P$……Equation (1)

By considering the tearing of the thread of the rods at their roots.

Tensile stress,

$\sigma_t = 4P_d / d_c^2$……Equation (2)

The nominal diameter can be selected from ISO metric screw threads table,

$d_o = d_c / 0.84$……Equation (3)

- **Length of coupler nut (l):**

Consider the direct shearing of the thread at the root of coupler nut and screw

The direct shear stress induced in screw thread:

$\tau_t = P_d / \pi d_c l$……Equation (4)

The direct shear stress induced in nut,

$\tau_s = P_d / \pi d_o l$……Equation (5)

Check of crushing of thread: $P = \pi / 4 (d_o^2 - d_c^2) * n * l * \sigma_c$……Equation (6)

- **Outside diameter of coupler nut (D):**

The outside diameter of the coupler nut may be obtained by considering permissible tensile stress for the material of coupler nut.

$\sigma_t = 4P / \pi(D^2 - d_o^2)$……Equation (7)

The actual practice, the diameter of the coupler nut D is taken from 1.25do to $1.5d_o$.,

D is taken as,

D=1.25do……Equation (8)

- **Outside diameter of coupler ($D_2$):**

The outside diameter of the coupler is obtained by considering permissible tensile stress. In actual practice, the outside diameter of the coupler D2 is taken as 1.5do to 1.7do.

$D_2 = 1.5do$……Equation (9)

- **Length of coupler ($L_n$):** Ln = 6do……Equation (10)
- **Thickness of coupler (t):** t =0.75do……Equation (11)
- **Thickness of coupler nut ($t_1$):** $t_1$ =0.5do……Equation (12)

## VII. Methodology

At the first instance we have prepared the CATIA model of knuckle joint. In the knuckle joint there are three basic components namely: eye end, fork end and pin. While preparing the CATIA model, we have assigned the proper dimensions and material properties of above mentioned parts. The material selected in the present investigation is plain carbon steel of grade 30c8. Following material properties have been considered for ANSYS solutions

- 1. Young's modulus – $2x10^{11}$ Mpa
- 2. Poisson's ratio- 0.3
- 3. Yield strength- 400Mpa

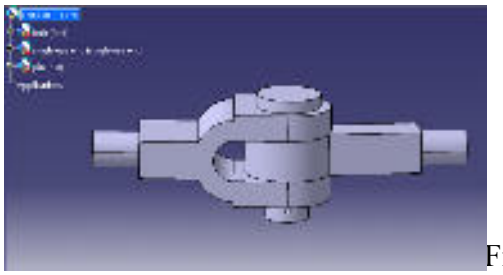

Figure. 3 CATIA model of knuckle joint

We also have prepared the CATIA model of Turnbuckle. In the Turnbuckle there are three basic components namely: Left hand rod, Right hand rod, Coupler. While preparing the CATIA model, we have assigned the proper dimensions and material properties of above mentioned parts. The material selected in the present investigation is plain carbon steel of grade 30C8. Following material properties have been considered for ANSYS solutions.

1. Young's modulus – $2x10^{11}$ Mpa
2. Poisson's ratio- 0.3
3. Yield strength- 400Mpa

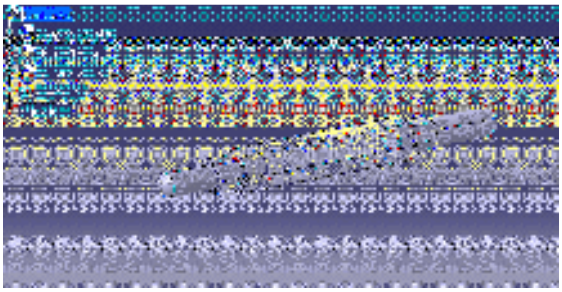

Figure .4 CATIA model of turn buckle

## VIII. Result and Discussion

Excel Sheet For Knuckle Joint:

| P(N) | 50000 | 60000 |
|---|---|---|
| $S_{yt}$(N/mm$^2$) | 400 | 400 |
| $S_{yc}$(N/mm$^2$) | 400 | 400 |
| $S_{sy}$(N/mm$^2$) | 200 | 200 |
| FOS | 5 | 5 |
| $\sigma_t$ (N/mm$^2$) | 80 | 80 |
| $\sigma_b$(N/mm$^2$) | 80 | 80 |
| $\sigma_c$(N/mm$^2$) | 80 | 80 |
| $\tau$(N/mm$^2$) | 40 | 40 |
| D (mm) | 28.21663 | 30.90977 |
| $D_1$ (mm) | 31.0383 | 34.00075 |
| a (mm) | 21.16247 | 23.18233 |
| b (mm) | 33.85996 | 27.09173 |
| d (mm) | 28.21663 | 30.90977 |
| $d_o$ (mm) | 73.39662 | 80.40197 |
| $d_1$ (mm) | 55.04747 | 60.30148 |
| $\sigma_t$ (N/mm$^2$) eye | 40.2381 | 40.2381 |
| $\sigma_c$(N/mm$^2$) eye | 40.2381 | 40.2381 |
| $\tau$(N/mm$^2$) | 40.2381 | 40.2381 |
| eye | | |
| $\sigma_t$ (N/mm$^2$) fork | 32.19048 | 32.19048 |
| $\sigma_c$(N/mm$^2$) fork | 32.19048 | 32.19048 |
| $\tau$(N/mm$^2$) fork | 32.19048 | 32.19048 |

**Graph:**

- Load(N) $V_s$ Stresses In Single Eye End
- Load(N) $V_s$ Stresses In Fork

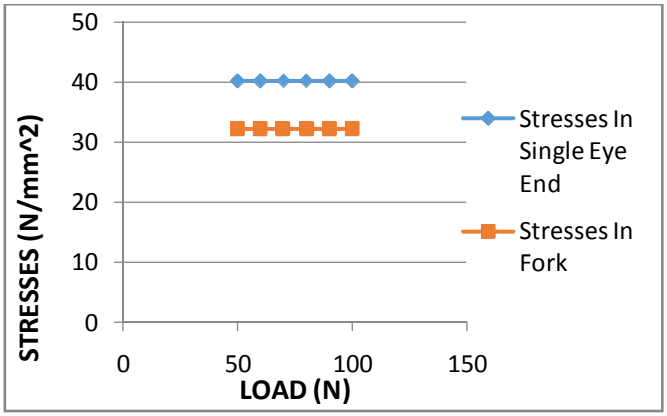


Figure 5. Stress Vs load

## IX. Simulation of knuckle joint

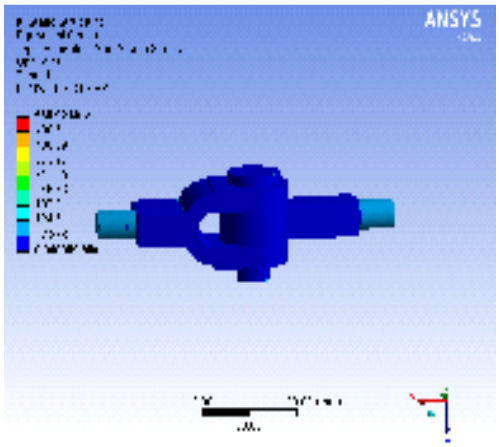


Figure 6. Simulation of knuckle joint

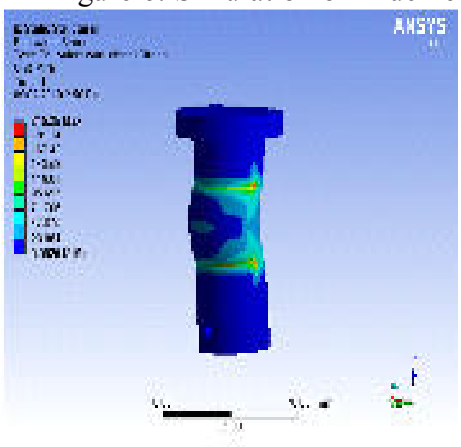


Figure7.simulation of knuckle pin

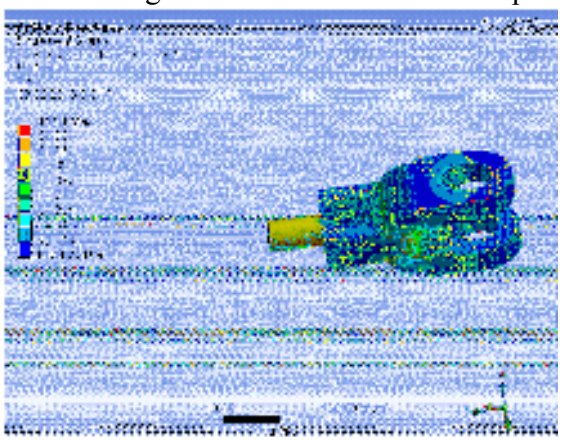

Figure 8.simulation of fork

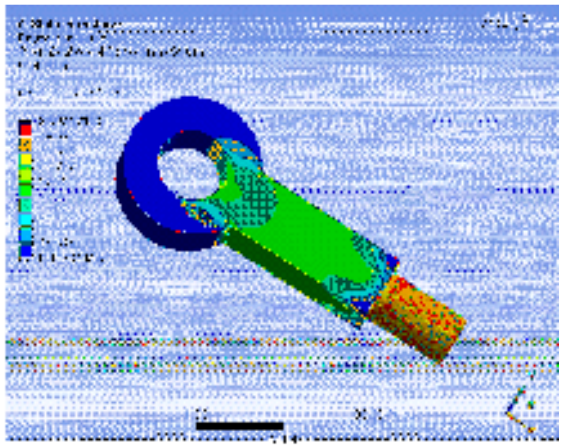

Figure 9. Simulation of single eye end

Above results shows calculations of stresses in knuckle joint with the help of excel sheet and ANSYS software.

**Numerical resultsfor Turnbuckle:**

| | | |
|---|---|---|
| **P (N)** | 50000 | 60000 |
| **Pd(N)** | 65000 | 78000 |
| **$\sigma_t$(N/mm$^2$)** | 75 | 75 |
| **$\tau$(N/mm$^2$)** | 37.5 | 37.5 |
| **$d_c$(mm)** | 33.22701 | 36.39836 |
| **d(mm)** | 39 | 39 |
| **l(mm)** | 39 | 18.19918 |
| **n** | 0.25 | 0.25 |
| **$\sigma_c$(N/mm$^2$) Rod** | 20.36753 | 51.95311 |
| **D(mm)** | 48.68528 | 50.39949 |
| **$D_1$(mm)** | 45 | 45 |
| **$D_2$(mm)** | 53.6121 | 55.14344 |
| **L(mm)** | 234 | 234 |
| **$t_1$(mm)** | 29.25 | 29.25 |
| **t(mm)** | 19.5 | 19.5 |

**Graph:**

- Load (N) $V_S$ core diameter of rod (mm)
- Load (N) $V_S$ outer diameter of coupler nut (mm)

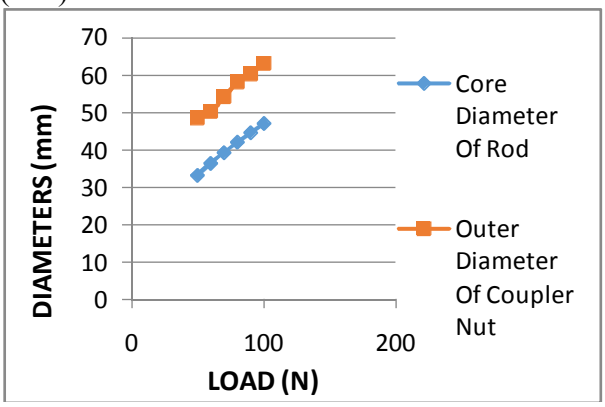


Figure 10. Diameter Vs Load

## X. Simulation of Turnbuckle

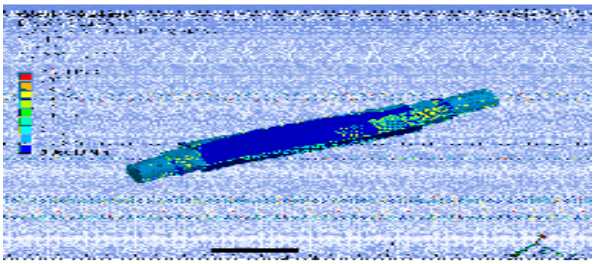

Figure 11. Simulation of turnbuckle

Above results shows calculations of stresses in Turnbuckle with the help of excel sheet and ANSYS software.

## XI. Conclusion

- Knuckle Joint and Turnbuckle are subjected to 50 KN tensile load.
- The design of knuckle joint and turnbuckle is executed by using Microsoft Excel.
  It is analyzed in ANSYS (workbench 14.5).
- Based on ANSYS analysis, it is concluded that the stresses induced in knuckle joint and turnbuckle at this load are within the limit of permissible stresses.
- Hence the dimensions obtained from excel sheet are acceptable. Therefore design is safe.

## References


- Saurav Das, Vishvendra Bartaria, Prashant Pandey, ‘‘analysis of knuckle joint of 30C8 steel for automobile Engg.” IJERT, Vol.3, Jan.2014.
- Dinesh Shinde, ‘‘analysis of Knuckle Joint Pin Used In Tractor Trailer”Arpn Journal of Engg. And Applied Science, Vol.10, No.5, and March 2015
- Nishant Vaibhav Saxena and Dr. Rohit Rajvaidya, ‘‘Study and Analysis of Knuckle Joint with Replacement of Material by Using Teflon”.
- R. S. Khurmi, J.K.Gupta, ‘‘A Textbook of Machine Design”, Eurasia Publication House, 2008.
- V.B.Bhandari, ‘‘Design of Machine Elements’’ Third Edition MC Graw Hill Education, 2015.

**M192**

# Design and Development of Hydraulic Press for Disposable tea cup

Ajit Kharad[1] Arpit Ganorkar[2] Bhagavan Kadam[3] Shubham Jadhav[4] Vikram Gundkar[5]
1,2,3,4,5UG students, Department of Mechanical Engineering, DKTE Society's Textile and Engineering Institute, Ichalkaranji , Maharashtra,India

***Abstract*** **-Hydraulic press is tool to produce compressive force by means of fluid.Generally the disposable tea cups are made of plastics.Instead of plastic we can use paper for the same which is easily available and cheap.The machine is operated by hydraulic system and is works on Pascal's Principle that pressure throughout the enclosed entity is constant.The basic parts of hydraulic press which we are using for making disposable tea cups are hydraulic cylinder,supportstructure,bed,die and punch.Our goal is to design and develop hydraulic press for making disposable tea cups of paper and also to increase production rate.**

*Key words: hydraulic press,disposablecups,paper*

## I. INTRODUCTION

The development of engineering over the years has been the study of finding ever more efficient and convenient means of pushing and pulling, rotating, thrusting and controlling load, ranging from a few kilograms to thousands of tons. Presses are widely used to achieve this. Presses, as defined by Lange (1975), are pressure exerting machine tools. They can be classified into three principal categories as: hydraulic presses which operate on the principles of hydrostatic pressure, screw presses which use power screws to transmit power and mechanical presses which utilize kinematic linkage of elements to transmit power.

In a hydraulic press the force generation,transmission and amplification are achieved using fluid under pressure.The liquid system exhibits the characteristics of a solid and provides a very positive and rigid medium of a power transmission and amplification.In a simple application, a smaller piston transfers fluid under high pressure to a cylinder having a larger piston area,thus amplifying the force.There is an easy transmissibility of a large amount of energy with practically unlimited force amplification.It has also a very low inertia effect.

## II. LITERATURE REVIEW

For this paper we all have research about press tools,pressmachines,there design and working mechanism. Press work is a method of mass production involving the cold working of metals, usually in the form of thin sheet or strip. Press working is one of the extensively employed methods of fabricating parts of intricate shapes with thin walls.Press working processes make use of large forces by press tools for a short time interval which results in cutting or shaping the sheet metal. Since, press working does not involve heating of the parts, close tolerances and high surface finish can be obtained on the part [1].

Bending is the process in which a force is applied to a piece of sheet metal and forming a desired shape. The bend angle is determined by the depth which the punch forces the sheet into the die. [2]

Press working does not involve heating of the parts, close tolerances and high surface finish can be obtained on the part. Since presses can produce components at fairly fast rates, the unit cost of labour for operating the press is fairly low. [3]

## III. METHODOLOGY

### i. Working principle

The hydraulic press depends on Pascal's principle: The pressure throughout a closed system is constant. At one end of the system is a small area piston driven by a lever to increase the mechanical advantage. The small-diameter tubing leads to the other end of the system. This is a large area piston that exerts a large force equal to the force exerted on the small piston, multiplied by the ratio of the areas.

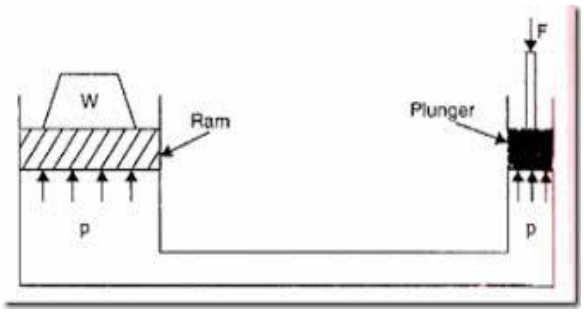


Fig. 1 Pascal's law

### ii. Components of Hydraulic Press

a) Support frame

It is an assembly of support frame and bed. Both the channels bolster each other with the help of a supportive plate welded at the top of the structure. Further it is welded at the foundation to give the whole assembly a framed structure. The bed which holds a die is clamped on the holes as shown in the figure.

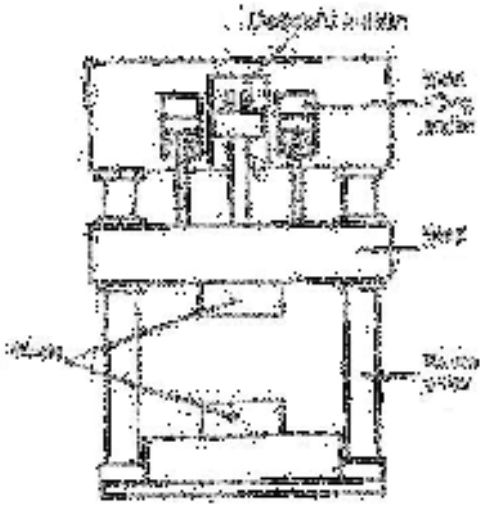

Fig. 2 2D Drawing of Support frame

The above figure given a clear idea about the support frame including the holes where the bed is supposed to be clamped and the foundation plates.

b) Bed

Bed is a plate on which the die is supposed to held. It is used for mounting the die on support frame at desired position. Figure shows the design of bed where the holes produced on the sides shows the support plate to be clamped on support frame.


Fig. 3 Bed

c) Die

Die is an integral part of any manufacturing process which enables the desired shape that one require. Here for the experimental purpose a compound die have been used which

produces a washer from the strip of sheet metal. The dimensions of the outcome washers are as follow. Outer diameter = 30 mm, Inner diameter = 10 mm. A blanking die produces a flat piece of material by cutting the desired shape in single operation. The finished part is referred to as a blank. Generally a blanking die may only cut an outer contour of part, often used for parts with no internal features. The detailed assembly of a die is shown in the below figure.

d) Punch

Punch is the male component of die. In compound die we used two punch one cuts inner diameter of washer and another cuts outer diameter of same. Punch which cuts I.D. is placed at bottom side of female die. Second punch that cuts outer diameter of washer is attached with piston rod of hydraulic cylinder. Position of same punch is above side of die. Here figure 6 shows the section view of punch that cuts outer diameter.

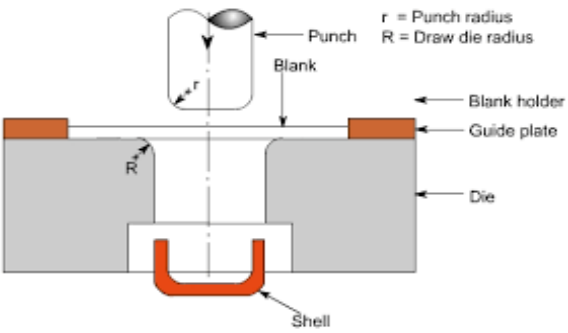


Fig. 4

Punch

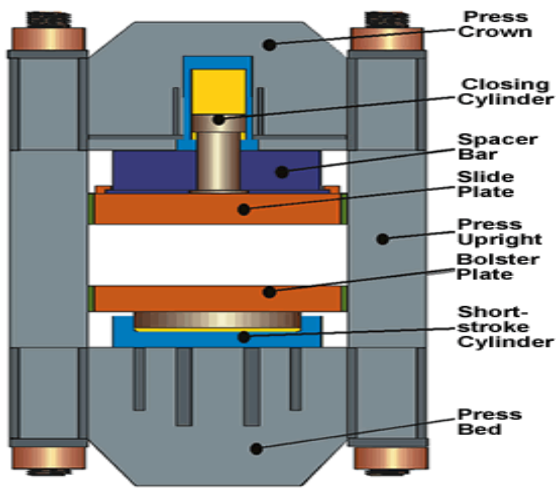


Fig.5 Full assembly of press machine

iii) Design Calculation

a) Design of Punch

A quick guide to determine tonnage requirements for punching steel is:

Diameter x thickness x 80 = tons (where 80 is constant for steel. Use 65 for brass.)

b) To determine strokes per minute for a hydraulic press the number of strokes per minute for a hydraulic press is determined by calculating a separate time for each phase of the ram stroke. The rapid advance time is calculated, then the pressing time, (the work stroke); then, if there is no dwell time, the rapid return. The basic formula for determining the length of time in seconds for each phase of the stroke:

$$(D \times 60) \div IPM = T$$

c) Design of Die

C x T x Ts = tons

Where:

C = circumference of the finished part; T = material thickness in inches; and

Ts = tensile strength of the material

## IV ADVANTAGES

1) It is very versatile machine which we can use for making cups, plates and any other thing if that shape of die and punch is with us.
2) This machine we can use for mass production with better accuracy.
3) We can achieve sixsigma in production by using this press machine.
4) Low maintenance cost.
5) Noiseless as well as frictionless operation.
6) Press working does not involve heating of the parts, close tolerances and high surface finish can be obtained on the part.

## V CONCLUSION

The hydraulic press for different components is studied by us, and after that design for disposal paper cups is done by the team. This machine surely helps for mass production and maintaining accuracy of product. This machine helps us to provide better quality of disposable cup without producing wastage with greater amount. At last we reached to the final production of disposable cups by using hydraulic press.

## VI REFERENCES

1.DESIGN AND MANUFACTURE OF A 30-TON HYDRAULIC PRESS published in AU J.T. 14(3): 196-200 (Jan. 2011)

2.DESIGN, MANUFACTURE AND SIMULATE A HYDRAULIC BENDING PRESS published in International Journal of Mechanical Engineering and Robotics Research

3.DESIGN AND DEVELOPMENT OF HYDRAULIC PRESS WITH DIE published in 5th National Conference on "Recent Advances in Manufacturing (RAM-2015)", 15-17 May, 2015

4.Research on YH30 Hydraulic Press Parts's Model Expression Based on XML.

**M194**

# A review on plastic extrusion, additive manufacturing & waste plastic material process

Deepak Ramchandra Salunkhe
Mechanical Department(Product Design and Development)D.K.T.E society's Textile and Engineering Institute,Ichalkaranji.
Kolhapur,Maharastra,India
Email id-dsalunhe83@gmail.com

Prof.V.P.Gaikwad
Professor,Dept. of mechanical Engineer
D.K.T.E society's Textile and Engineering ,Ichalkaranji.
Kolhapur,Maharastra,India
Email id-gvinayak2002@gmail.com

*Abstract*

**Nowadays, market is constant changes require continuous flexibility and adaptation in the supply provided by different organizations. The plastic Extrusion, 3D printing & automotive industry represents one of the most demanding sectors due to the high levels of competition . This is undertaken through the constant processes improvement and continuous reduction of costs. This study define strategies for determining an optimum process of both the extruder energy and thermal efficiency. An attempt was made to investigate the possible correlation between melt temperature stability and energy consumption in polymer extrusion. For this extrusion process an efficient recycling plastic is a valuable material. The paper first carried out conventional recycling process shown in an existing study. However, we thought the concept is more suitable for small sized e-waste recycling in extrusion process , since the cost issue is more flexible than large-sized e-waste.**

*Keywords— Extrusion, Process efficiency, Thermal stability,Plastic materials, 3D printing ,Recycling process, Plastic filament.*

## I. INTRODUCTION

Since its discovery, plastic has taken an increasingly prominent role in modern society. From drink bottles to windshields to even clothing, it has begun to replace various traditional materials. Plastic is durable and long-lasting, qualities which made it seem like the perfect substance for a diversity of uses .This plastic is introduced for extrusion Technology in 1870. The extruder machines have only been able to process certain specific polymers. That is why the importance of designing and manufacturing extruder machines can incorporate and process the wide range of polymer types.

From 1960 onwards, the constant developments made in extruder machine manufacturing have been successful in this regard. The basic design of extruder machines did not change afterwards. In principle, every extruder machine follows certain mechanical procedure during production.

It is a good practice to perform analysis for any constructing design work in engineering world specifically, in the field of plastic engineering. Extruder manufacturing is the core part of design and implementation. Viscosity, melt flow and size of the machine determines the predictability and manufacturability of the product. This process should be carried out to make it feasible & to make it real and different working principles of the machine. The machine may replace any bulky extrusion system . Existing commercial extrusion machines are currently modified to improve their accuracy and capabilities. However, high costs, material restrictions, and difficulty to study process parameters should be considered.

Filament Production is the process which is used for the 3D printer. In the present days there are not yet small portable extruders which can only make the plastic filament . The filament should be able to be produced on smaller extruders. The extruder should be able to fit on the side of the 3d Printer to make it more comfortable .the filament should be made easily available by processing the plastic on small machine rather than buying it on the market. The test of the filament and the production quality will be tested by making this extruder.

## II. LITERATURE REVIEW

In the view of current research areas of extrusion technologies various journals and papers are referred which is arranged in following section.Chamil Abeykoon 2015 et al. [1][7] worked on investigation of the process energy demand in polymer extrusion. Extrusion is one of the fundamental production methods in the polymer processing industry and used in the production of a large number of commodities in a diverse industrial sector. The barrel/die heaters also consume a considerable amount of energy depending on their wattage, material being processed, screw geometry used in the machine, selection of process

settings, etc. Extruders obtain the required heat energy for material melting via these heaters and through the mechanical work generated by the screw rotation. Usually, these heaters are resistive loads and hence there will be no energy efficiency issues relating to the power factor. However, excessive process heat is removed by the blowers attached along the barrel or by internal cooling of the screw core or barrel wall to maintain the process thermal stability and these heat removals come under the forced cooling losses. Adrian L.kelley et al. UU. found that the temperature across the melt flow significantly varied over the processing conditions. The magnitude of the thermal fluctuations were found to increase with screw speed. Barrel set temperature also showed some influences on melt thermal variations but to a lesser extent. Moreover, process thermal fluctuations depending on the screw geometry. In general, the thermal fluctuations were found to be slow in nature and these were below 0.5 Hz over the different processing situations tested (i.e. from 10 to 90 rpm over 3 different barrel set temperature conditions). Also, a considerable amount of heat energy is lost across the surfaces exposed to the surroundings naturally via radiation and convection. In general, efficiency of extruder related to the die barrel heater and its thermal stability. Eillen Harkin-jones et al. 2015 [1] has research on the Process efficiency in polymer extrusion is important parameter in extrusion process & Correlation between the energy demand and melt thermal stability. Thermal stability is of major importance in polymer extrusion, where product quality is dependent upon the level of melt homogeneity & also diameter of extruder wire achieved by the extruder screw. Extrusion is an energy intensive process and optimisation of process energy usage while maintaining melt stability is necessary in order to produce good quality product at low unit cost. Initially, a review was carried out on the monitoring and modelling of the energy consumption in polymer extrusion. Also, the power factor, energy demand and losses of a typical extrusion plant were discussed in detail. The mass through put, total energy consumption and power factor of an extruder were experimentally observed over different processing conditions and the total extruder energy demand was modelled empirically and also using a commercially available extrusion simulation software. The experimental results show that extruder energy demand is heavily coupled between the machine, material and process parameters.

The extruder is most important piece of machinery in the polymer processing industry. To extrude means to push or to force out. Material is extruded when it is pushed through an opening. The part of the machine containing the opening through which the material is forced is referred to as the extruder die. The function of the cooling system of a plastic extrusion is to provide regulation in the process. As well as, a review is carried out on the monitoring and modelling of the energy consumption in polymer extrusion.

Joaquim de Ciurana et al. 2013[2] work is focused on selecting process parameters in additive manufacturing system for recycled Poly lactic acid ( PLA) manufacture. Additive manufacturing (AM) technologies may offer a viable and simpler alternative to fabricate object directly from patient data. Existing commercial AM machines are currently being modified to improve their diameter of wire accuracy and capabilities .In this paper high costs, material restrictions, and difficulty to study process parameters should be considered. Many complications concerning high costs, low efficiency, and long fabrication times have been associated with object manufacturing technologies, and therefore, the progression and implementation of object at a high scale has been restricted. Lidia Serenoa et al.2013[2] work on, additive manufacturing technologies. Recently 3D printing emerged as an innovative set of technologies to produce 3D products, may offer a simpler alternative to fabricate these constructs while controlling efficiently their architecture. In fact, several additive technologies have alredy used to design and manufacture object for medical applications, including fused deposition modelling (FDM), stereo lithography (SLA), Inkjet printing, and selective laser sintering (SLS) . In terms of tissue engineering, these additive manufacturing technologies enable the fabrication of customized objects directly from the patient, by using a scanner to import the 3D data needed, and employing a range of materials such as polymers or ceramics. For this purpose, existing additive manufacturing machines are currently being modified to improve their accuracy and capabilities. However, many contradictions still need to be considered, including the high costs associated with these commercial machines, their material restrictions, and the difficulty to study process parameters. The optimization of process parameters is a major challenge to obtain adequate scaffold morphology and biomechanical behaviour. It is very important to improve cells adhesion and proliferation by using a material properties , porosity and therefore, which improves the matrix formation. Elia Vallesa et al. 2016[4] worked on appropriate porosity, pore size, pore shape, and mechanical strength are required to achieve cell growth and matrix formation. Open source extruders, like 3D printing machine, allow a thorough study of several process parameters involved in the fabrication of object such as, deposition velocity, layer thickness, nozzle tip size, filament distance, deposition pattern, and speed movement. Therefore, a precise control over this manufacturing process is possible. In fact, the selection of correct process parameters will have a direct influence on the morphology and biomechanical performance of these constructs manufactured with the 3D printing machine.

The study and optimization of a novel open-source and low-cost 3D extruder machine, called Rep-Rap, employed to fabricate Poly-L-lactic Acid (PLA) object. Porosity and mechanical strength were analysed under several conditions, and optimal process parameters were determined to ensure the best performance.

Jefferson Hopewell et al. 2017 [3] presented on the Plastics recycling challenges and opportunities in extrusion process. Plastics are inexpensive, lightweight and durable materials,

which can readily be moulded into a variety of products that find use in a wide range of applications. Serdar Ulubeyli et al. 2016[4] identified that a consequence, the production of plastics has increased over the last 60 years. However, current levels of their usage and disposal generate several environmental problems. Around 4 per cent of world oil and gas production, a non-renewable resource, is used as feedstock for plastics and a further 3–4% is expended to provide energy for their manufacture.M. Puncochar et al. 2012[6] worked on Design of a Proper Recycling Process for Small-Sized E-waste which can use for plastic 3D printing filament . Recently, small-sized home appliances have been including the recycling legislations of Japan. Thus, combinations of pulverization and physical separation technologies & development of process for disposal of plastic waste using plasma pyrolysis technology and option for energy recovery are being discussed. In this paper, we will review the current systems and technology for plastics recycling in extrusion, life-cycle evidence for the eco-efficiency of plastics recycling P. and briefly consider related economic and public interest issues. Kenta Torihara et al. 2016[5] has focused on production and disposal of packaging as this is the largest single source of waste plastics in Europe and represents an area of considerable recent expansion in recycling initiatives. Once material enters the waste stream, recycling is the process of using recovered material to manufacture a new product. It is also quite possible for the same polymer to cascade through multiple stages e.g. manufacture into a re-usable container, which once entering the waste stream is collected and recycled into a durable application that when becoming waste in its turn, is recovered for energy .

For organic materials like plastics, the concept of recovery can also be expanded to include energy recovery, where the calorific value of the material is utilized by controlled combustion as a fuel, although this results in a lesser overall environmental performance than material recovery as it does not reduce the demand for new original material. This thinking is the basis of the 4Rs strategy in waste management parlance in the order of decreasing environmental desirability reduce, reuse, recycle and recover with landfill as the least desirable management strategy.

## III.REFERENCE


1. Chamil Abeykoon , Adrian L. Kelly , Elaine C. Brown , Javier Vera-Sorroche , Phil D. Coates ,Eileen Harkin-Jones. Investigation of the process energy demand in polymer extrusion: A brief review and an experimental study.2015
2. Joaquim de Ciuranaa, Lídia Serenóa, Èlia Vallèsa Selecting process parameters in Rep-Rap additive manufacturing system for PLA scaffolds manufacture.2013
3. Jefferson Hopewell1, Robert Dvorak2 and Edward Kosior2, Plastics recycling: challenges and opportunities.2017
4. Serdar Ulubeylia, Aynur Kazazb, Volkan Arslana Construction and demolition waste recycling plants revisited: management issues.2016
5. Kenta Toriharaa, Tomoaki Kitajimaa, Nozomu Mishimaa Design of a Proper Recycling Process for Small-Sized E-waste.2016
6. M. Punčochářa, B. Rujb, P. K. Chatterjeeb. a Development of process for disposal of plastic waste using plasma pyrolysis technology and option for energy recovery.2012
7. Chamil abeykoon.Single screw extrusion control:A compressive Review and direction for improvement,2010
8. Chamil Abeykoon,Adrian L.kelley.process efficiency in polymer extrusion:correlationbetween the energy demand and melt stability.
9. Sfeir RA. Measured savings of DC to AC drive retrofit in plastic extrusion. In: Proceedings of the 13th industrial energy technology conference, New Orleans, USA, May 6–9, 2008. .
10. Drury B. The control techniques drives and controls handbook. London-UK : The Institution of Electrical Engineers; 2010.
11. plastic technology 1993.additives for maintaining the value of the plastic.
12. Dealy JM. Energy conservation in plastics processing: a review. Polym Eng Sci 1982

**M196**

# Improvement in hydraulic performance of centrifugal pump by varying the blade geometries of impeller

Mr.Nilesh N Patil[1]
Research scholar, Department Mechanical of Engineering
D.K.T.E'S Textile and Engineering Institute, Ichalkaranji, India.
Email address:nilesh4707@gmail.com

Prof.Dr.V.R.Naik[2]
Professor, Department Mechanical of Engineering
D.K.T.E'S Textile and Engineering Institute, Ichalkaranji, India.

Prof.G.S.Joshi[3]
Associate Professor, Department Mechanical of Engineering
D.K.T.E'S Textile and Engineering Institute, Ichalkaranji, India.

**Abstract— in many situations, one has to lift water to higher levels for example for irrigation purpose or sometimes land is at higher level than the source. For this purpose pumps are used. These pumps convert mechanical energy into hydraulic energy. The mechanical energy is provided with the help of electrically operated motor which is coupled with the pumps. These pumps are majorly classified as rotodynamic pumps, positive displacement pumps etc. These hydraulic performances can be analyzed by using the software codes like Computational Fluid Dynamics (CFD). Here, the centrifugal pump performance is improved by varying the geometries of impeller.**

*Keywords—Centrifugal pump, Hydraulic performance, Computational Fluid Dynamics.*

## INTRODUCTION OF CENTRIFUGAL PUMP

Centrifugal pumps have many applications in industrial fields like chemical industry, petroleum industry, pharmaceutical industry, in mining industry, metallurgical operations and coal industry and so on. Fig.1 shows the detailed parts of centrifugal pump.

Currently the performance of centrifugal pump to be used for domestic applications is analyzed by varying impeller geometries. In very previous years, the pumps were analyzed by the only performance at manufacturing unit with trial and error but, it was time consuming process.

*Fig.1Centrifugal pump details*

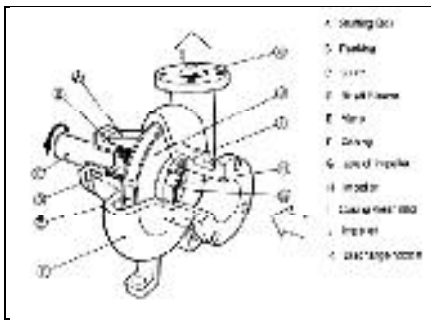

Currently the performance of centrifugal pump to be used for domestic applications is analyzed by varying impeller geometries. In very previous years, the pumps were analyzed by the only performance at manufacturing unit with trial and error but, it was time consuming process.

Another option to study the performance has been introduced with the help of Software tools like Computational Fluid Dynamics (CFD) which gives the better results fast without taking much time. The software codes like Fluent, Gambit or Star CCM are used to see the behavior of pump against flow. This software interface provides the performance result and prevents actual manufacturing cost of prototype or experimentation as well as time wastage for experimentation.

## LITURATURE REVIEW

The casting of the centrifugal pumps is sometimes used from simulation results. The blades or impellers used in the pumps may be straight or twisted. From simulation results it is observed that, twisted blade pumps gives better results rather than the straight-blade pumps. Three types of centrifugal pumps are considered in the simulation. One pump had four blades and other had six twisted blades. Two rotational speeds 2900 rpm and 1450rpm were used in the computations for both straight and twisted blade cases. The predicted results for the head-flow curves in these cases are presented over the entire flow range. It was found that predicted results for pump second and third model were better than those for pump first model, which suggests that the

efficiency of second and third pump model will also be higher than that of the first pump model[1].

The numerical simulation or analysis is to be carried out with multiple frames of reference to predict the flow field inside the entire pump casing and impeller. Nowadays there are requirement regarding Pump to satisfy specified duty point means required head and discharge, with less power consumption. For the pump used for water service applications, periodic maintenance is required to check the wear out parts like wear ring, shaft sleeves. In such case horizontal split case pumps are more suitable. With the aid of computational fluid dynamics, the complex internal flow in horizontal split case pump can be well predicted thus facilitating the design of pump. The diameter of impeller, as well as modification in Volute design with the help of CFD design gives better efficiency [2].

To improve the performance of centrifugal pump various modifications and combinations are taken into considerations which referred. The changes in the parameters like the performance of impellers with the same outlet diameter having different blade numbers are thoroughly evaluated. With the increase of the blade number, the area flow pressure region grows continuously. The investigation focuses mainly on the efficiency of the pump. Centrifugal pumps with impeller blades 4, 5, 6, 7, 8, 9, 10, 11 and 12 with and its efficiency at 2900 rpm, 3300 rpm and 3700 rpm is evaluated by using CFD code of commercial software Fluent 6.3.The numerical analysis displays that with the increase in rotational speed, the head and efficiency of the centrifugal pump is increasing. The head is also increasing with the increase in blade number but the efficiency of centrifugal pump varies with number of blades and shows maximum for 10 number of blade [3].

A comparative study of pump impellers is done to improve the parameters like head with the help of Computational Fluid Dynamics (CFD).The improvement in Pressure and velocity contours is analyzed. The geometry of impellers with Inlet and outlet angles modeled using modeling software like Solid works. After changing the outlet blade angles and number of blades in impeller, the changes in the head were predicted. The head of mixed flow impeller improved by the 10.29meters.Outlet pressure, efficiency also increased to considerable amount[4].

As far as the Centrifugal pump is concerned the pump performance is expressed in the form of characteristics such as head, discharge, power consumption and efficiency. This performance improvement is explained by following techniques:

i. Trimming Impeller.
ii. Blade angle variation.
iii. Diffuser addition.
iv. Tip clearance.
v. Splitter Blades.

Trimming of the impeller of centrifugal pump improves the strength of impeller. Use of diffuser gives the better performance. Also, change in tip clearance shows better performance in case of centrifugal fans [5].

Parametric Study of Centrifugal Pump and its Performance Analysis is done by using CFD.Depending upon the calculated parameters the modelling of the pump components is done in the modelling software PTC Creo 2.0 and then the CFD analysis of the centrifugal pump is performed. For performing The CFD analysis of pump geometry is carried out and qualitative results of CFD analysis are presented in terms of streamline plots.

For operating characteristic curves, the speed of pump is kept constant and the variation of head, power & efficiency with respect to discharge is plotted. It is seen that as discharge increases, the efficiency increases, and reaches maximum at rated conditions and then decreases when discharge increases beyond rated conditions. The CFD analysis of the centrifugal pump is done for determining the performance of centrifugal pump. By CFD analysis, the efficiency obtained is 81 % which is satisfactory [6].

## METHODOLOGY FOR DEVELOPMENT OF IMPELLER

The primary goal of this work is to make the geometrical modifications in existing modification so as to get the better results e.g. Head, Discharge, and efficiency etc. So, in order to improve the performance of centrifugal pumps is study of key components like impeller and investigation of find the optimum conditions using softwares.

Here, the geometrical changes in the existing impeller were done by varying vane outlet angles. Initial outlet vane angle for base impeller was 20˚.Now, the outlet angles changed as 19.36˚, 22˚, 25.11˚ and 26.88˚ .The geometrical modelling of the 5 impellers was done. Figure 2.shows the various angles of impeller.

*Fig.2 various angles of impeller*

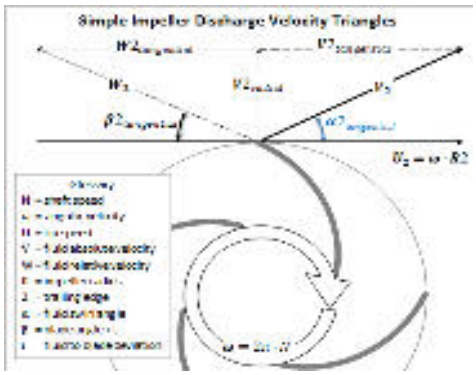


Figure 3 shows the vane outlet angles of 5 impellers including base design.These 5 impellers are tested through the CFD analysis.

*Fig.3 Vane angles at the outlet of impeller*

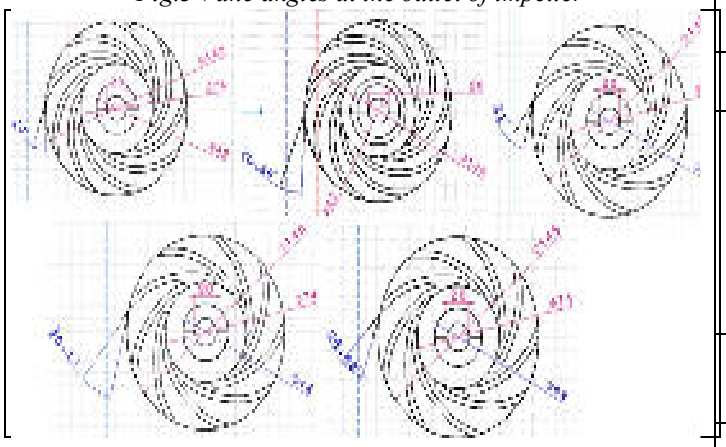

## CFD ANALYSIS

Computational Fluid Dynamics (CFD) is one of the Computer Aided Engineering (CAE) tool. It is rapidly becoming an important tool for analysis of flow behavior and design in hydraulic engineering. The input to software is meshed geometry of the model and this geometric modeling is done by using Computer Aided Design (CAD) softwares.Computational fluid dynamics (CFD) is the analysis of systems involving fluid flow, heat transfer and associated phenomena such as chemical reactions by means of computer-based simulation [7].

By applying the boundary conditions shown in table 1, these 5 models were imported in ANSYS. The CFD analysis is done with Fluent Computational Code. The contours with velocity total pressure along with path lines were plotted.

*Table 1.Boundary conditions*

| Specifications | Description |
|---|---|
| Mass flow at inlet | 11LPS(10.99Kg/s) |
| Pressure Outlet | 0 (Gauge Pressure)In case of outlet boundary condition, operating pressure in Fluent is 101325 Pa; therefore here gauge pressure is zero. |
| Turbulence | Turbulence Model - SST K- ω Model |
| Fluid | Water (Desity:998.2 kg/m3, Viscosity 0.001003 Kg/m-s |
| Fluid Zones | Impeller- Rotating (speed-2600 RPM) and Casing, suction pipe, delivery pipe-Stationary |

*Fig.4 Pressure contours across impellers*

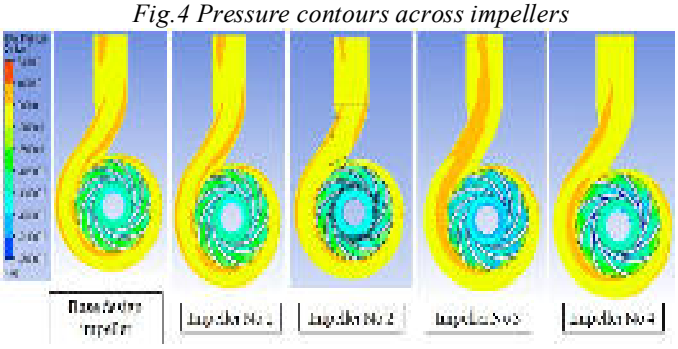

*Fig.5 Velocity contours across impellers*

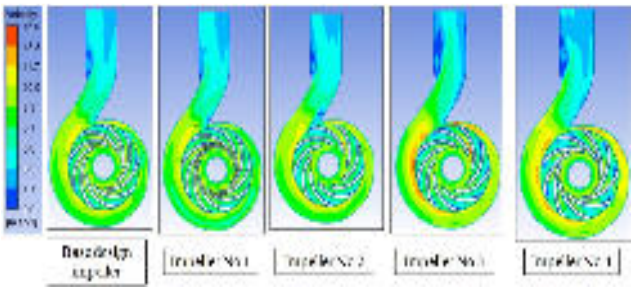

The above figures 4 and 5 shows pressure and velocity contours respectively. Now, the methodology for development of pump performance was done by selecting the impeller with best velocity contours which was further taken for casting. The results of velocity contours from all the impeller models were compared. It was found that impeller model number 3 with

angle 25.11˚ showed considerable improvement as compared to others shown in table 2.

*Table 2.Pressure drop and velocities across pump*

| Simulation Case | Vane Outlet angle | Pressure Drop ΔP (Pa) | M of $H_2O$ | Impeller Outlet (m/s) |
|---|---|---|---|---|
| Base Design | 20˚ | 165587.4 | 16.8 | 12.15 |
| Impeller No.1 | 19.36˚ | 158907.9 | 16 | 11.75 |
| Impeller No.2 | 22˚ | 185132.3 | 18.8 | 12.23 |
| Impeller No.3 | 25.11˚ | 204563.3 | 20.8 | 12.97 |
| Impeller No.4 | 26.88 ˚ | 168234.1 | 17.1 | 12.72 |

BASE FOR SELECTION OF IMPELLER MODEL

The Impeller model number 3 shows considerable improvement in meters of water. This may help in improving the pump head. Average Velocities at the impeller outlet are increased in the Impeller model number 3 (~13m/s). This will help to improve the flow characteristics along with the increase in discharge. Impeller model number 3 with 25.11˚blade angle gives considerable improvement than other impellers Hence, from figures 4 and 5 contour plots impeller model no.3 is considered as best geometrical design since, the pressure and velocity contours for impeller model no.3 is most effective.

This impeller No.3 was taken for experimentation. It was incorporated with same casing of base design. After experimentation the improvement in the head, discharge and efficiency was observed which is shown in Table 3.

*Table 3.Comparison between experimental results of base design and impeller No-3*

| Parameters | Base Impeller Model | Impeller model No 3 |
|---|---|---|
| Discharge (lit/sec) | 11.20 | 12.02 |
| Head in Meters | 20.87 | 21.47 |
| Vane Outlet Angles | 20˚ | 25.11˚ |
| Input power in kw | 3.181 | 3.272 |
| Pump Output in kw | 2.098 | 2.349 |
| Pump Efficiency in % | 66.0 | 71.79 |

## Conclusion

With the help of numerical simulation mechanical behavior is analyzed. The results with incorporated geometries of the total 4 impellers excluding basic (existing) impeller model in Ansys with various outlet angles and the Impeller model number 3 shows considerable improvement that is 21.47meters of water. Thus, head is improved by 0.6 meters. The discharge is also improved by 0.82 liters per second.

The efficiency is improved by 5 points in percentage

ACKNOWLEDGMENT

Special thanks for to Suyash Castings Pvt. Ltd, G-2 Shiroli MIDC Shiroli, Kolhapur, for supporting in need of drawing, casting as well as for provision experimental set up.

REFERENCES

[1] Weidong Zhou, Zhimei Zhao, T. S. Lee, and S. H.Winoto, “Investigation of Flow Through Centrifugal Pump Impellers Using Computational Fluid Dynamics”, International Journal of Rotating Machinery, (2003) pp-49–61.

[2] V.S.Kadam, S.S.Gawade, H.H.Mohite,N.K.Chapkhane, “Design and Development of Split Case Pump Using Computational Fluid Dynamics”, Institute of Technology, Nirma University, Ahmedabad, (2011), pp-1-4.

[3] Sujoy Chakraborty, K.M. Pandey, Bidesh Roy, “Numerical Analysis on Effects of Blade Number Variations on Performance of Centrifugal Pumps with Various Rotational Speeds” International Journal of Current Engineering and Technology, (2012), pp-143-152.

[4] S.C.Chaudhari, C.O.Yadav, A.B.Damor, “A Comparative study of mix flow pump impeller CFD analysis and experimental data of submersible pump”, International

Journal of research in Engineering & Technology, (2013), pp-57-64.

[5] Pranit Patil, Shrikant B.Gawas, Priyanka P.Pawaskar, Dr.R.G.Todkar, "Effect of Geometrical changes of impeller on centrifugal pump performance", International Research Journal of Engineering and Technology, ISSN 2395-0056, Vol-2, Issue-2m (2015), pp-220-224.

[6] Shardul Sunil Kulkarni, "Parametric Study of Centrifugal Pump and its Performance Analysis using CFD", International Journal of Engineering Technology and Advanced Engineering", ISSN 2250-2459, Vol-4, Issue-7, (2014), pp-155-161.

[7] H K Versteeg and W Malalasekera, "An Introduction to Computational Fluid Dynamics", Second Edition, ISBN: 978-0-13-127498-3 (2007), pp-17-19.

**M197**

# Design and Fabrication of Hydraulic Metal Sheet Bending Machine

Mr. Sandeep S. Karake
Dept. of Mechanical Engineering
DKTE Society's Textile & Engineering Institute
Ichalkaranji, India
sandepkarake.126@gmail.com

Mr. Azeem Ahmed M.S. Khan
Dept. of Mechanical Engineering
DKTE Society's Textile & Engineering Institute
Ichalkaranji, India
khanazeem40@gmail.com

Mr. Shubham D. Kavathekar
Dept. of Mechanical Engineering
DKTE Society's Textile & Engineering Institute
Ichalkaranji, India
Shubhamkavathekar7010@gmail.com

Prof. A. V. Sutar
Assistant Professor Dept.of Mechanical Engineering
DKTE Society's Textile & Engineering Institute
Ichalkaranji, India
avsutar1987@gmail.com

**Abstract—Sheet metal is metal formed by an industrial process into thin, flat pieces. It is one of the fundamental forms used in metalworking and it can be cut and bent into a variety of shapes. A bending machine is a forming machine tool. Its purpose is to assemble a bend on a work piece. A bends is manufactured by using a bending tool during a linear or rotating move. A brake is a metalworking machine that allows the bending of sheet metal. It gives information about the limitation of manually operated sheet bending machine and hydraulic operated sheet bending machine. The punch are designed to be designed to be rigidly fixed and easily removable. A student version of AUTOMSIM was used to simulate the hydraulic operation of the machine.**

*Keywords—: Metal sheet, Hydraulic circuit, Fabrication*

## INTRODUCTION

Sheet metal is metal formed by an industrial process into thin, flat pieces. It is one of the fundamental forms used in metalworking and it can be cut and bent into a variety of shapes. There are many different metals that can be made into sheet metal, such as aluminum, brass, copper, steel, tin, nickel and titanium. For decorative uses, important sheet metals include silver, gold, and platinum. Sheet metal is used in automobile and truck (lorry) bodies, airplane fuselages and wings, medical tables, roofs for buildings (architecture) and many other applications. Stainless steel of grade 304 is the most common, it offers good corrosion resistance while maintaining formability and weld ability.

This is a form of bending used to produce long, thin sheet metal parts. The machine that bends the metal is called a press brake. The lower part of the press contains a V-shaped groove called the die. The upper part of the press contains a punch that presses the sheet metal down into the v-shaped die, causing it to bend. There are several techniques used, but the most common modern method is "air bending". Here, the die has a sharper angle than the required bend (typically 85 degrees for a 90 degree bend) and the upper tool is precisely controlled in its stroke to push the metal down the required amount to bend it through 90 degrees. Typically, a general-purpose machine has

an available bending force of around 25 tons per meter of length.

The press usually has some sort of back gauge to position depth of the bend along the work piece. The back gauge can be computer controlled to allow the operator to make a series of bends in a component to a high degree of accuracy. Simple machines control only the backstop, more advanced machines control the position and angle of the stop, its height and the position of the two reference pegs used to locate the material. The machine can also record the exact position and pressure required for each bending operation to allow the operator to achieve a perfect 90 degree bend across a variety of operations on the part.

The old metal sheet bending machine are manually operated in which power screw is used to bend the metal sheets. Due to limitations of manually operated bending machine we can use hydraulic system to bend metal sheets for more efficient work. The hydraulic press depends on Pascal's principle the pressure throughout a closed system is constant. One part of the system is a piston acting as a pump, with a modest mechanical force acting on a small cross-sectional area; the other part is a piston with a larger area which generates a correspondingly large mechanical force. Only small-diameter tubing (which more easily resists pressure) is needed if the pump is separated from the press cylinder.

We can easily replace old power screw mechanism by hydraulic system for metal sheet bending. Old power screw mechanism is time consuming and slow production process, on other hand hydraulic operated mechanism is easy to operate with high production. We can use synchronizing circuit for movement of punch. Simple synchronizing circuit for two cylinders can be used with 4/3 directional control valve. By the use of simple levers and push buttons, the operator of a hydraulic system can easily start, stop, speed up and slow down. A fluid power system (without using cumbersome gears, pulleys and levers) can multiply forces simply and efficiently from a fraction of a pound, to several hundred tons of output.

## METAL SHEET BENDING

Bending of sheet metal is a common and vital process in manufacturing industry. Sheet metal bending is the plastic deformation of the work over an axis, creating a change in the part's geometry. Similar to other metal forming processes, bending changes the shape of the work piece, while the volume of material will remain the same. In some cases bending may produce a small change in sheet thickness. For most operations, however, bending will produce essentially no change in the thickness of the sheet metal. In addition to creating a desired geometric form, bending is also used to impart strength and stiffness to sheet metal, to change a part's moment of inertia, for cosmetic appearance and to eliminate sharp edges.

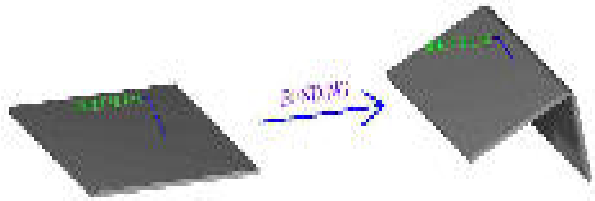

Fig No-2.1 Formation of Sheet Metals

Metal bending enacts both tension and compression within the material. Mechanical principles of metals, particularly with regard to elastic and plastic deformation, are important to understanding sheet metal bending and are discussed in the fundamentals of metal forming section. The effect that material properties will have in response to the conditions of manufacture will be a factor in sheet metal process design. Usually sheet metal bending is performed cold but sometimes the work may be heated, to either warm or hot working temperature.

Most sheet metal bending operations involve a punch die type setup, although not always. There are many different punch die geometries, setups and fixtures. Tooling can be specific to a bending process and a desired angle of bend. Bending die materials are typically gray iron, or carbon steel, but depending on the work piece, the range of punch-die materials varies from hardwood to carbides. Force for the punch and die action will usually be provided by a press. A work piece may undergo several metal bending processes. Sometimes it will take a series of different punch and die operations to create a single bend. Or many progressive bending operations to form a certain geometry.

Sheet metal is referenced with regard to the work piece when bending processes are discussed in this section. However, many of the processes covered can also be applied to plate metal as well. References to sheet metal work pieces may often include plate. Some bending operations are specifically designed for the bending of differently shaped metal pieces, such as for cabinet handles. Tube and rod bending is also widely performed in modern manufacturing.

Bending Processes-

Bending processes differ in the methods they use to plastically deform the sheet or plate. Work piece material, size and thickness are important factors when deciding on a type of metal bending process. Also important is the size of the bend, bend radius, angle of bend, curvature of bend and location of bend in the work piece. Sheet metal process design should select the most effective type of bending process based on the nature of the desired bend and the work material. Many bends can be effectively formed by a variety of different processes and available machinery will often determine the bending method.

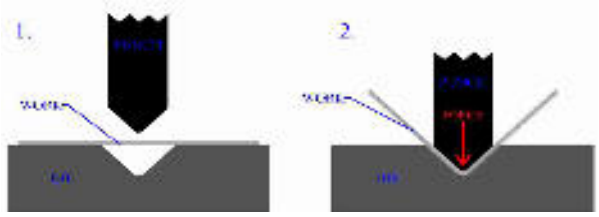


Fig No-2.2 Sheet Metal Bending with a Die

One of the most common types of sheet metal manufacturing processes is V bending. The V shaped punch forces the work into the V shaped die and hence bends it. This type of process can bend both very acute and very obtuse angles, also anything in between, including 90 degrees.

Edge bending is another very common sheet metal process and is performed with a wiping die. Edge bending gives a good mechanical advantage when forming a bend. However, angles greater than 90 degrees will require more complex equipment, capable of some horizontal force delivery. Also, wiping die employed in edge bending must have a pressure pad. The action of the pressure pad may be controlled separately than that of the punch. Basically the pressure pad holds a section of the work in place on the die, the area for the bend is located on the edge of the die and the rest of the work is held over space like a cantilever beam. The punch then applies force to the cantilever beam section, causing the work to bend over the edge of the die.

Fig No-2.3 Manually Operated Bending Machine

## HYDRAULIC OPERATED METAL SHEET BENDING MACHINE

Sheet metal bending process is performed on sheet metal bending machine. The machine consists of a holding beam that holds down the punch, and which is connected to hydraulic cylinders. The movement of piston rod of cylinders pushes punch on the groove of die which results in the bending of metal sheet in required angle. Manual bending machines however have some disadvantages in that they are not conducive to higher production rates, quality or repeatability; however they are suitable for low scheduling light workloads. Hydraulic powered sheet metal bending machines counteract the disadvantages of manually operated sheet metal bending machines, but they have a limitation in that they are affected by power cuts.

Fig No-3.1 Hydraulic Operated Metal Sheet Bending Machine

## CALCULATION FOR FORCE REQUIRED TO BEND METAL SHEET

Bending operations are performed using punch and die tooling. The two common bending methods and associated tooling are V-bending, performed with a V-die.

Bending force can be estimated by means of the following equation:

$$F = \frac{Kb \times TS \times w \times t^2}{D}$$

Where,

F = Force required for bending metal sheet.

Kbf = Constant that accounts differences encountered in an actual bending force.

TS = Yield tensile strength of material.

W = Width of metal sheet in the direction of bend axis.

t = Thickness of metal sheet.

D = Die opening.

| Parameters | Value |
|---|---|
| Materials | Stainless steel<br>Mild steel |
| Maximum sheet thickness | 2 mm |
| Maximum length of metal sheet | 1980 mm |
| Tensile strength for mild steelIS 2062 | 250 Mpa |

| | |
|---|---|
| Tensile Strength for Stainless steel 304 | 215 Mpa |
| Kbf | 1.33 for V die bending |
| Die opening | 8t= 16 mm |

Now, tensile strength of mild steel is greater than that of stainless steel so calculations are done for mild steel sheet metal. So force on beam will be,

$$F = \frac{1.33 \times 250 \times 1980 \times 2^2}{16}$$

## MODELLING AND DRAFTING OF MACHINE ON CATIA

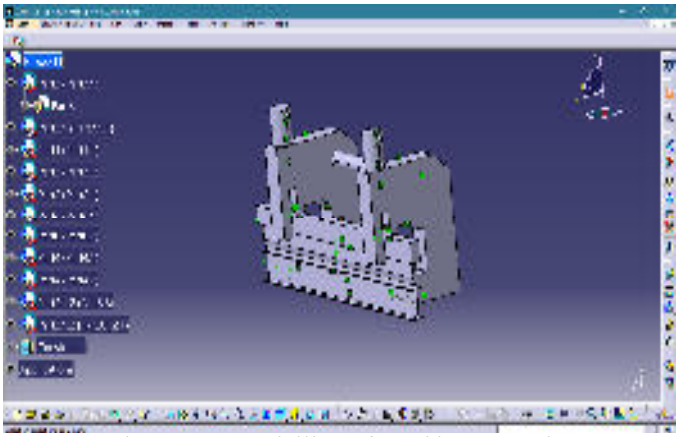

Fig No-5.1 Modelling of machine on Catia

Fig No-5.2 Drafting of machine on Catia

## SYNCHRONIZED HYDRAULIC CIRCUIT

For synchronizing the movement of two cylinders, the flow divider should have a 1:1 ratio, and the cylinders should have the same bore and stroke. Accuracy of flow division is usually about ± 5%, but may vary slightly according to volume of oil flow, degree of unbalance in load between the cylinders, and sometimes other factors.

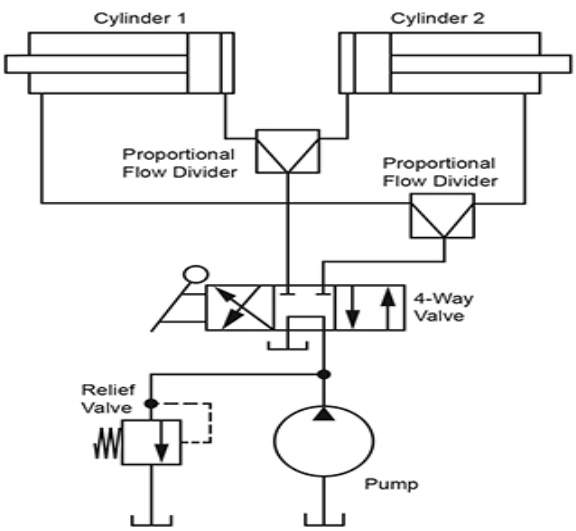


To synchronize the cylinders in both directions of travel, two flow dividers must be used. Or, one unit may be used if it is designed to divide flow in one direction and combine equal flows in the reverse direction. A unit designed only for dividing will not combine equal flows; reverse flow is uncontrolled as it would be in passing through a pair of plain orifices. To reduce power losses in reverse flow, check valves may be placed around the divider.

Fig No-6.1 Synchronizing circuit Using Automsim Software

## CALCULATION FOR HYDRAULIC SYSTEM COMPONENTS

The load will be evenly distributed between the two hydraulic cylinders hence the force on each cylinder

$$Forceoneachcylinder = \frac{164.58}{2}$$
$$= 82.29\ KN$$

For the hydraulic system an operating pressure of 150 bar is selected. The effective piston area is calculated by following equation,

$$A_{eff} = \frac{Axialforceoneachcylinder}{Operatingpressure}$$

$$A_{eff} = \frac{82.293 \times 10^3}{150}$$
$$= 5.486 \times 10^{-3} m^2$$

The effective piston area is used to calculate the hydraulic cylinder bore diameter D, as follows:

$$Aeff = \frac{\pi \times D^2}{4}$$

$$D = \sqrt{\frac{4 \times 5.486 \times 10^{-3}}{\pi}}$$
$$D = 0.08357\ m$$
$$D = 83\ mm$$

Using preferred cylinder sizes and piston diameters, we determine that the appropriate piston diameter

Bore diameter = 100 mm

Rod diameter = 50 mm

Now,

$$A_{eff} = \pi \times 0.1^2/_4$$
$$A_{eff} = 7.8539 \times 10^{-3} m^2$$

The annulus area Da, is calculated using,

$$A_a = A_{eff} - \frac{\pi \times d^2}{4}$$

$$A_a = 7.8539 \times 10^{-3} - \frac{\pi \times (50 \times 10^{-3})^2}{4}$$
$$A_a = 5.890 \times 10^{-3} m^2$$

Now Forces for extension and retracting stroke,

Extension stroke force,

$$F_f = P \times A_{eff}$$
$$F_f = 150 \times 10^5 \times 7.8539 \times 10^{-3}$$
$$F_f = 117.808\, KN$$

Retracting force,

$$F_r = P \times A_a$$
$$F_r = 150 \times 10^5 \times 5.890 \times 10^{-3}$$
$$F_r = 88.350\, KN$$

Stroke of the cylinder is 200 mm, using the stroke the velocity Ve of the hydraulic cylinder during extension period of 20 seconds can be determined as follows,

$$V_e = \frac{Stroke}{Cylinderextensiontime}$$
$$V_e = \frac{200}{20}$$
$$V_e = 10\, mm/s$$

The Velocity of the hydraulic cylinder is 10mm/s.

The flow rate, Qe, during extension is calculated as,

$$Q_e = A_{eff} \times Velocityduringextension$$
$$Q_e = 7.853 \times 10^{-3} \times 0.01 = 0.07853 \times 10^{-3} m^3/s$$
$$Q_e = 4.7718\, lpm$$

The same flow rate is used to retract the cylinder; hence the retraction velocity, Vr, is determined as follows:

$$V_r = \frac{Q_e}{A_a}$$
$$V_r = \frac{0.07853 \times 10^{-3}}{5.890 \times 10^{-3}}$$
$$V_r = 13.3\, mm/s$$

Therefore retraction time is tr is,

$$t_r = \frac{Stroke}{V_r}$$
$$t_r = \frac{200}{13.3}$$
$$t_r = 15.07\, s$$

Hydraulic pump sizing

The hydraulic pump supplies the pressurized fluid for cylinder actuation. A vane pump is to be used to power up the hydraulic system. The following calculations will be useful in sizing the desired pumping unit.

Taking a volumetric efficiency, ηv, of 90% and speed rating of 1200 rpm, we can obtain the theoretical pump delivery.

$$\eta_v = \frac{Actualpumpdelivery}{Theroticalpumpdelivery}$$
$$Theroticalpumpdelivery = \frac{7.853 \times 10^{-5}}{0.9}$$
$$Theroticalpumpdelivery = 8.7255 \times 10^{-5} \frac{m^3}{s}$$
$$= 5.2353\, lpm$$

The pump displacement per revolution, Dp, is calculated as follows,

$$D_p = \frac{Theroticalpumpdelivery \times 60}{Pumpspeedrating}$$
$$D_p = \frac{8.7255 \times 10^{-5} \times 60}{1200}$$
$$D_p = 0.4362 \times 10^{-5} m^3$$

From this calculations appropriate pump will be selected.

Reservoir design

The most suitable hydraulic reservoir capacity for industrial process is 5 to 8 times of pump capacity.

$$Reservoirvolume = 6 \times 5.2353$$
$$Reservoirvolume = 31.41\, l$$

So reservoir capacity is selected as 30 liter.

## DISADVANTAGES OF MANUAL OPERATED MACHINE

1. Human effort is used rotate screw which press punch on die. It requires more human power.
2. Bending of metal sheet with manual operated machine is very time consuming process.
3. Production rate is very low.
4. Manual operation results in less perfection.
5. More labor

## ADVANTAGES OF HYRAULIC OPERATED MACHINE

1. Simpler design – In most cases, a few pre-engineered components will replace complicated mechanical linkages.
2. Flexibility – Hydraulic components can be located with considerable flexibility. Pipe and hoses instead of mechanical elements virtually eliminate location problems.
3. Smoothness – Hydraulic systems are smooth and quiet in operation. Vibration is kept to a minimum.
4. Control – Control of a wide range of speed and forces is easily possible.
5. Cost – High efficiency with minimum friction loss keeps the cost of a power transmission at a minimum.
6. Overload protection – Automatic valves guard the system against a breakdown from overloading.

## CONCLUSION

Hydraulic Bending Machines Saves more times than the power screw bending machine. The hydraulic Circuit is simulated using Automsim software. The design of the machine components is done in CATIA V5R20. Man, efforts are reduced by the hydraulic bending machine also the productivity increase. The hydraulic system can do work which is beyond human efforts. Using hydraulic system for bending metal sheet reduces time, increases production.

## REFERENCES

[1] Manar Abd Elhakim Eltantawie [2013], "Design Manufacture and Simulate a Hydraulic Bending Press", 'International of Mechanical Engineering and Robotics Research', ISSN 2278-0149, VOLUME 2.

[2] A. D. Zope, R. R. Deshmukh, D. R. Mete and V.S. Mane [2017], "Review Paper on Design and Development of Metal Bending Machine", 'IOSR Journal of Mechanical and Civil Engineering(IOSR-JMCE)', ISSN: 2278-1684, PP: 46-48.
[3] Aniruddha Kulkarni, Mangesh Pawar, Pravin Yadav and Sohan Japtap [2015], "Sheet Metal Bending Machine", 'International Journal of Innovation in engineering Research and Technology', ISSN: 2391-3696, VOlUME 2.
[4] Narendra Rathore[2015], "Design of Hydraulic Circuit and Hydraulic Loss Calculation for Pre-Installation Check of Landing Gear Jack Accessories", 'International Journal of Innovative and engineering Research in Engineering', ISSN 2394 – 3343, VOLUME 2, ISSUE 11.
[5] Nagesh, Sunil Mangshetty, Bharth Kodli [2013] "Sheet Metal Forming Analysis with An Emphasis on Spring Back Deformation", 'International Journal of Engineering research and Technology' ISSN: 2278-0181 VOLUME 2, ISSUE 10
[6] N. Gwangwava, L. Mugwagwa and S. Ngoma [2013], "Design of a Dual Operating Mode Sheet Folding Machine", 'International of Mechanical Engineering and Robotics Research', ISSN: 2278-0149, VOLUME 2.
[7] "Fundamentals of Modern Manufacturing", Milell P. Groover, Wiley India Edition, Third Edition.
[8] "Fundamental of Metal Forming Process", B.L. Juneja, New Age International Publishers, Second

**M199**

# "A Review on Introduction to Cryogenics and its Application in Rocket Engine"

Shivani Lad[1],
[1] Student, Mechanical Engineering Department,
D.K.T.E'S Textile and Engineering Institute, Ichalkaranji, India.

**Abstract: - This paper aims to introduce the cryogenics and its application in space technology that is rocket engine. Cryogenics plays great significance in space technology like rocket engine, missiles. Cryogenics is the word comes from Greek language, "kryos" that is cold and "gen" means to produce, that is cryogenics is the science and technology of producing low temperature environment application below 120K.**

**In rocket engine, liquid hydrogen or liquid oxygen is used as a fuel which are clean and non pollutant fuels other than hydrocarbon fuels. As per the Newton's third law of motion, the thrust produced in rocket engine is outwards whereas that produced in jet engine is inwards.**

*Keywords: - Cryogenics, Rocket Engine, Liquid Hydrogen and Liquid Oxygen, Newton's Third Law of Motion.*

## I. INTRODUCTION

In physics, cryogenics is the study of the production of very low temperature that is -150$^0$c or -238$^0$F or 123K. The branches of physics and engineering that involves the study of very low temperatures, how to produce them, and how materials behave at those temperatures. It typically comes in relation with deep freezing process. Cryogenic technology involves the use of rocket propellants at extremely low temperatures. The combination of liquid oxygen and liquid hydrogen offers the highest energy efficiency for rocket engines that need to produce large amounts of thrust. Oxygen remains liquid only at temperature below -183$^0$c and hydrogen at below -253$^0$c. This cryogenic rocket engine works on the principle of Newton's third law of motion. According to this law, the thrust produced in rocket engine is outwards whereas that produced in jet engine is inwards.

## II. HISTORY OF CRYOGENIC ROCKET ENGINE

The Rocket Technology has a great history involving many powerful nations including United States of America, Russia, Japan, France etc. In later half of 20th Century for this technology there is a competition between these countries since it's invention by USA. When USA successfully launched its 1st Atlas V rocket with the use of RL-10 engines in 1963 with the successful flight, boosted up the cold war between Russia & USA which played a significant role in rapid advancement in this technology in such a short period of time. After USA, Russia started its tests of launch vehicles. Firstly, Russia carried a dog named 'Linus' in space in 1983. Russia was the first country to put a satellite and later a human in space
, successfully launched a rocket with a cryogenic engine in 1987 using sputnik. Other countries are like Japan used LE5 in 1977, France used HM7 in 1979, China used YF-73 in1984. Here the mixture of liquid N2, H2 and O2 are used as fuels, which are clean and non pollutant other than hydrocarbons.

## III. CRYOGENIC ROCKET ENGINE

Cryogenics is the process which involves the generation of very low temperatures below 123K. The cryogenic rocket engine is powered by cryogenic

propulsion, in which liquid hydrogen is used as a fuel to propel the rocket while liquid oxygen is used as an oxidizer. The combination of liquid hydrogen and liquid oxygen is most widely used. Because they are easily available and cheap, when burned they produce very high exhaust velocity of 4.4 km/s.

At the time of World War II, the cryogenic rocket engines were first considered by American, German, Russian engineers independently. They all discovered that the rocket engine needs the high mass flow rate of both oxidizer and fuel to produce sufficient thrust. This is achieved by cooling the fuel and oxidizer mixture at below 123K or -150$^0$c. Because hydrogen and oxygen are universally available in gaseous state, and in gaseous state their pressure and temperature are not sufficient to produce the sufficient thrust for rocket. Therefore, to get required mass flow rate, it is indispensable to convert them into liquid state from gaseous state.

Figure1. RL-10 Rocket Engine

## IV. CONSTRUCTION AND WORKING OF CRYOGENIC ROCKET ENGINE

### A). Construction:-

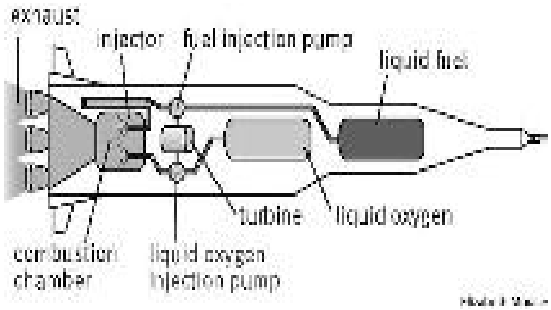


Figure2.Construction of Cryogenic Rocket Engine

The major components of a cryogenic rocket engine are the combustion chamber (thrust chamber), pyrotechnic igniter, fuel injector, fuel cryopumps, oxidizer cryopumps, gas turbine, cryovalves, regulators, the fueltanks, and rocket engine nozzle. In terms of feeding propellants to combustion chamber, cryogenic rocket engines work in either an expander cycle, a gas-generator cycle, a staged combustion cycle, or the simplest pressure-fed cycle.

The cryopumps are always turbo pumps powered by a flow of fuel through gas turbines. Looking at this aspect, engines can be differentiated into a main flow or a bypass flow configuration. In the main flow design, all the pumped fuel is fed through the gas turbines, and in the end injected to the combustion chamber. In the bypass configuration, the fuel flow is split; the main part goes directly to the combustion chamber to generate thrust, while only a small amount of the fuel goes to the turbine. The main parts are as follows:-

**1) Gas Generator**:-

The main function of the gas generators is to deliver the sufficient amount of gas at designed temperature, a pressure which generates continuous propellant supply to thrust chamber.

**2) Turbo-pump:-**

They receive liquid propellants at low pressure from tanks and adds energy to the propellers through rotation and then are supplied to the combustion chamber.

**3) Pyrotechnic igniter:-**

A pyrotechnic igniter is a device which contains a pyrotechnic composition used primarily to ignite the other more difficult to ignite materials. These are often electrically controlled.

**4) Nozzle:-**

It is a propelling nozzle used to expand and accelerate the combustion gases produced by burning propellants so that the exhaust gases exit the nozzle at hypersonic velocities.

**5) Thrust or combustion chamber:-**

The thrust is generated in thrust chamber by the efficiency conversion of chemical energy into kinetic energy. This can be achieved by burning the liquid propellants which are metered, injected, atomized, vaporized, mixed, and burned to form hot reaction gases, which in turn are accelerated and ejected at high velocity.

**B). Cryogenic Fuel:-**

In cryogenic rocket engine, hydrogen and oxygen are both liquefied at below -253$^0$c and -183$^0$c respectively. These liquefied gases are referred as super cooled because they remains in liquid state even it is difficult to stay at a temperature lower than freezing point.

These propellants are normal at atmospheric conditions. But to store these propellants aboard a rocket is a very difficult task as they have very low densities. Hence extremely huge tanks will be required to store the propellants. Thus by cooling and compressing them into liquids, we can vastly increase their density and make it possible to store them in large quantities in smaller tanks. Liquid oxygen boils at 297$^0$F and liquid hydrogen boils at 423$^0$F.

**Table1.**

| | | | |
|---|---|---|---|
| 1. | Density (Kg/m$^3$ ) | 70.8-hydrogen | 1141-oxygen |
| 2. | Boiling point at atmospheric pressure(K) | 20.2 - hydrogen | 90.2-oxygen |

**C). Working:-**

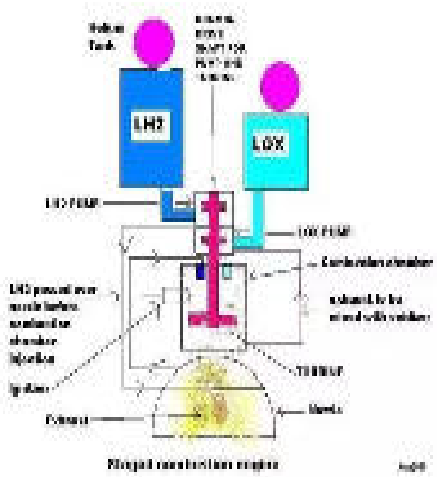


Figure3. Working of Cryogenic Rocket Engine

It involves a complicated 'staged combustion cycle' to increase the engine efficiency. Special insulated containers and vents are used to prevent gas from the evaporating liquids to escape. Liquid hydrogen is partially burnt with a little liquid oxidizer then liquid fuel and oxidizer are fed from the storage tank to an expansion chamber that is passed on turbine. The hot gases drive a turbo-pump. Then are injected at high pressure through fuel injector into the combustion chamber, where rest of oxygen is introduced. In this chamber, they are mixed and ignited by a flame or spark that is with pyrotechnic igniter. The fuel expands as it burns and the hot exhaust gases are directed out of the nozzle to provide thrust.

Before going to gas generator, the incredibly chilly liquid hydrogen is used to cool the thrust chamber where the temperatures rise over $3{,}000^0$c when engine gets fired.

## V.ADVANTAGES

1) Liquid engines working with cryogenic propellants liquid oxygen and liquid hydrogen are considered relatively environment friendly, non-toxic and non-corrosive.
2) These propellants are clean fuels, when they combine, they impart only water, which is thrown out in the form of very hot vapour.
3) The use of oxygen and hydrogen as fuels is very economical, as liquid oxygen costs less than gasoline.
4) These propellants are easy to store and handle, so it reduces the cost of launch operations.

## VI.DISADVANTAGES

1) Boil off rate
2) Highly reactive gases
3) Leakage
4) Hydrogen embrittlement

## VII. CONCLUSION

From this paper we can clear the basic idea about cryogenic technology and its application in rocket engine. According to Newton's third law motion, action and reaction produced are equal in magnitude and opposite in direction. The thrust produced in rocket engine is outwards whereas that produced in jet engine is inwards. Due to these liquefied propellants high energy per unit mass is obtained.

From this, we conclude that the cryogenic rocket engine has greater efficiency than jet engine. Also, liquid hydrogen and liquid oxygen are environment friendly, cheap and these gases easily available in universe.

## REFERENCES

1) Akhil Garg et al,Cryogenic Technology & Rocket Engines, International Journal of Aerospace and Mechanical Engineering, Vol.2, August 2015
2) Rakesh R. et al, An Experimental Study of Cryogenic Engine, International Journal of Innovative Research in Science, Engineering and Technology, Vol.4, Feb 2015
3) Bhaskar Thakur et al, A Review on Cryogenic Rocket Engine, International Research Journal of Engineering and Technology (IRJET), Vol.4, August 2017
4) Akhil Chhaniyara, "Cryogenic Rocket Engine", International journal of Mechanical engineering and robotics Research, vol. 2, October

**M200**

# Design, Development and Fabrication of Tumbling Machine

Chetan P. Patil [1], Rohit R. Kadam [1], Abhijit R. Jadhav[1], Nikhil R. Ingawale[1], Vasudev D. Shinde[2]
U.G.Student [1], Professor in mechanical Engineering [2],
Department of Mechanical Engineering, DKTE's Textile and Engineering Institute, Ichalkaranji (INDIA)

***Abstract*** **:A typical foundry consists of machines from metal pouring to finished casted part. Fettling is one of the process mainly termed as cleaning process of cast part. Tumbling is one of the fettling processes consist of removing thin sections and surface improvements. We made a tumbling machine as a final year project. It consists of rotating drum rested on bearing supports and rotated by two stage belt drive. The machine works on the principle of barreling effect. In which the cast parts are rotated inside the drum along with the other additives such as steel balls and stars. We have designed for the machine and improved it for better efficiency.**

***Keywords—Foundry; Fettling process; Tumbling; barreling effect, Steel Balls and Stars.***

## Introduction

Tumbling machine is foundry related machine used for cleaning and polishing of the casting. Instead of shot blasting this machine can be used for same purpose. We visited some foundry industries in our locality and observed that mostly they are using shot blasting to clean casting from sand.

The project is concerned with design and manufacturing of tumbling machine. Tumbling machine is a machine that is used to remove sand adhering to the casting surface. In this machine castings are rotated in the drum with the ceramics and steel balls. In this project stress has been given on the design of transmission system. We have used two stages of V-belt drive for transmitting power from motor to the rotating drum. According to the requirements of sponsor we have designed the machine for 150-kg mass of castings.

The project is about to manufacture the working model of the tumbling machine. The sponsor has provided us the specification for the machine dimensions and capacity of machine. We have designed the tumbling machine for 150 Kg of material for one time and working for 10 hours per day. The working model is more developed than the available in foundry, we have visited. It is required in market because it is cheaper than shot blast as it has initial cost as well as working cost higher than our model. The working time per batch is at least 1 hour but the results aremore improved than the shot blast. Due to the stars we have using for tumbling will remove the sand and also give good surface finish to the castings.

## Cleaning of Casting / Fettling

After Solidification of cast product it removed from mould box. This cast product is attached with risers, and gates, many times the molding sand also get adhered to the casting as some of the sand gets fused withthe molten metal.The cleaning of castings refers to the removal of gates, risers and sand. Also,cleaning may involve machining or abrasive finishing of the cast product. The cleaningoperations usually performed on a casting are given below:

1. Removal of gates, in-gates, riser, feeder etc.
2. Surface cleaning
3. Trimming
4. Finishing

### A. *Removal of gates, in-gates, riser, feeder etc.*

There are various methods of removal of unwanted metallic parts from the solidified castproduct. in case of brittle material, the gates, risers, and feeder can be removed by impact force.this is usually done in shakeout or knock out devices. Other processes that may be used to cut offthe metallic parts include, band saws, grinding machine, shearing machine, cutting torches, etc.

### B. *Surface Cleaning*

As the temperature of molten metal is usually high, sand particles near the surface of the casting gets fused and adheres to the surface of the casting. the cleaning of the surfaces both interior and exterior thus becomes necessary. There exist several methods to remove the adhered sand from the castings. Some of the most common methods of removal of sand are tumbling, and sand or metallic shot blasting. Tumbling is done in a barrel like machine called as tumbling mill which helps to remove the sand by rubbing action of the cast parts with each other. Whereas, inblasting, abrasive particles are thrown on the

surface of the casting in a carrying medium. Air isthe most common medium used in this process. Sometimes, metallic shots are thrown on the surface of the castings to remove the unwanted material. Blasting processes include air blasting,centrifugal blasting, hydro-blasting etc. Other methods to clean the cast surface include wire brushing, and buffing.

### *C. Trimming*

Trimming operations involves the removal of fins, gates and risers appendages, metallicchaplets, etc. These unwanted material is removed by using hammer and chisel called aschipping process, or by pneumatic chipping hammers or by the use of grinders.

### *D. Finishing*

The finishing at this stage refers to the final cleaning. The castings after the removal of gates,risers, fins, chaplets, adhered sand is washed and then depending upon the requirements of theend product final finish is provided by machining, polishing, buffing, chemical treatment etc.

## Tumbling or Rumbling

Tumbling or Rumbling is used for removing adhering sand from the castings. It employs a rotating iron drum or steel barrel cylindrical hexagonal or octagonal in section.

General Working

The barrel is filled with castings, star shaped hard iron pieces (called mill stars), small pieces of gates and runners, granite chip, pieces of graphite electrodes etc.The barrel ends are closed and the barrel is rotated at about 30 to 60 rpm. As the barrel rotates, castings tumble over each other, rub off the adhering sand and the surfaces of the castings are burnished.

The speed of rotation of the drum is *"all important"* in the rapid working of the material in the drum. Surprising enough, there is just one speed at which the drum and its charge will work most efficiently. Faster or slower than this speed will increase the time necessary to finish the job. The reason for this is easy to understand when we know the processes at work in either grinding or polishing in a tumbling drum. The mechanism is *not* one of tumbling, in spite of the name. All, or at least 90%, of the work is done by a *sliding* motion of the contents of the drum.

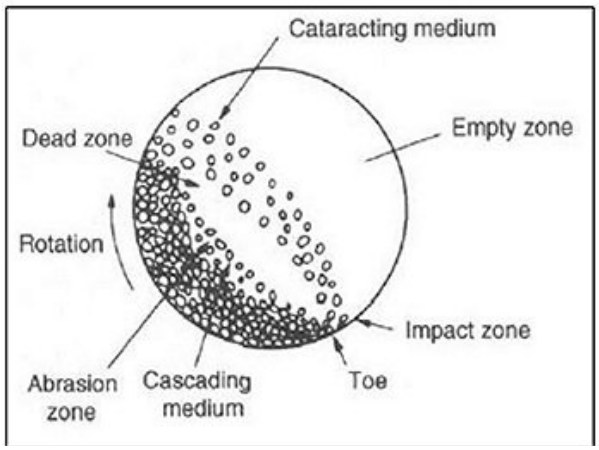


Figure1. Mechanism of Tumbling Machine

PROBLEMSTATEMENT

Tumbling machine is one of traditional machines. In modern days shot blasting is the most popular method used in industries. Because of some disadvantages tumbling is preferred in some cases. The disadvantages is listed below

1. High initial cost
2. High operating cost for small number of castings
3. Large floor space required

## *A.* Project Justification

We choose the tumbling machine because of following reasons: -

1. Purpose: -
   The requirement for sponsor was to clean the runners and risers. So there was no need for good surface finish and to choose shot blasting.
2. Initial cost: -
   Tumbling is having very low investment cost as around Rs30000/- as compared to high initial cost of shot blasting machine.
3. Cleaning cost: -
   Cleaning cost of runners and risers on tumbling machine is very low as compared to shot blasting.
4. Machine requires less maintenance.
5. Number of workers required is very low.

### *B. Design Parameters*

We defined some of the parameters of our project and then design for the rest. We design the machine for –

1. Size of Casting – Ranging from 50x50x50 mm to 100x100x100 mm.
2. Volume of casting to be tumbled at a time is considered about 0.02 cubic meter at maximum.
3. Thickness of the drum considered as per the available machines in industry.We choose 4mm wall thickness and 12mm for end plates for better strength.

## PROPOSED DESIGN

As per the parameters define in the problem statement we have designed the machine. We have selected octagonal shape of drum for better efficiency.

A. General Layout

Following figure shows the General Arrangement of tumbling machine.

It mainly consists of an octagonal drum rotating in bearing support and fixed in shaft at both ends. It is driven by 3 phase motor and connected by two stage belt drive. We choose two stage belt for our convenient to reduce cost of manufacturing. The sufficient height is chosen for convenience of operator to load and unload job. For small floor space and in minimum power we get the better results from the tumbling machine

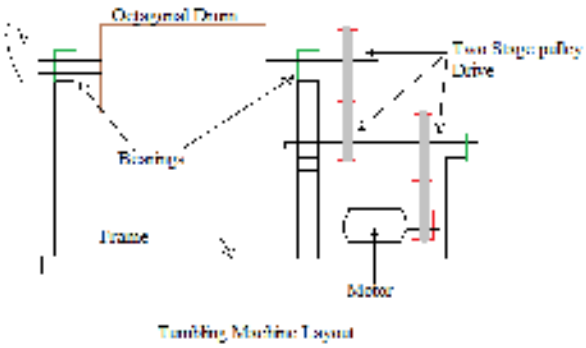


Figure3. Layout Of Tumbling Macine

The following figure shows the conventional machine available in industry. Mostly they are used for heavy castings and economical for large floor area. But for small casting it is not so helpful. Size of the drum decides the casting size to be tumbled and also the time required for good efficiency.

Figure2. Heavy Tumbling Machine Available in Industry

B. Components Specification

The list of components used for the machine is given below.

| Sr. No. | Component | Specification | Quantity |
|---|---|---|---|
| 1. | Octagonal Drum | D= 350<br>L= 600 | 1 |
| 2. | Main Shaft | D= 50<br>L= 180 | 2 |
| 3. | Intermediate Shaft | D= 31.75<br>L= 800 | 1 |
| 4. | Pulley | D= 307 & 76 | 4(Pair of each Diameter) |
| 5. | Bearings | UCP210<br>UCP207 | 4( Pair of each type) |
| 6. | Belt | B55<br>B53 | 4 (Pair of each type) |
| 7. | Motor | 3Phase, 2HP<br>720rpm | 1 |

All Dimensions are in mm

C. Machine Assembly

1. Drum Assembly

Figure4. Octagonal Drum Assembly

Figure5. Drum Hollow from inside

The drum is of octagonal shape and completely hollow from inside as you see in figure. The parts are loaded in drum and stars and steel balls are added for friction. The parts are self-working as they create friction in between them. It is 350mm in diameter and 600mm in length. During working the parts and additives are half-filled. This is the requirement for sufficient working.

2. System Assembly

System consist of drum attached with bearing and rotated through motor which connected by two stage pulley drive. According to load consideration we choose double belt drive to avoid slip and provide firm grip. A rigid frame is constructed to take all load and provide strength against unwanted vibration. Following are final assembly photos.

Figure6. Belt drive assembly for the system

Figure7. Front view of tumbling machine

## VI. Conclusion

Tumbling machine is commonly used machine for fettling of heavy cast parts but also economical for small ones. As per shape, size and rotating speed the efficiency of machine is determined. It has slow operation than shot blasting but the results are more satisfying than shot blasting.

## VII. References


[1] Jain P. L., Principles of foundry technology, Tata McGraw Hill publishing company ltd, New Delhi, second edition, pp 212-216.

[2] Sinha K. P , Goel D. P ; foundry technology, Standard publishers distributors, sixth edition ,1996, pp. 189-192.

[3] Heine R. W; Loper Jr C. R., Rosenthal P. C., " Principles of Metal casting." Tata McGraw Hill publishing company ltd, New Delhi, TMH edition ,1988 , pp. 672-678.

[4] Shigley J. E; Mischke C. R; "Mechanical Engineering Design (in S.I units)", Tata McGraw Hill publishing company ltd, New Delhi, Sixth edition ,2003,pp. 686-690,705-710,891-936,1101-1136.

[5] Kurmi R. S ; Gupta J. K; "Theory of Machines", S.Chand and company Ltd , New Delhi,15th edition,2003,pp. 43-54.

[6] Bhandari V. B; "Design of Machine elements", Tata McGraw Hill publishing company ltd, New Delhi, first edition, 1995, pp. 234-246,419-437,507-509,388-393

**M201**

# A Numerical Analysis of Constraint Effects using Stress Triaxiality as a Parameter on SENB Specimen

Sanjeev M. Kavale
School of Mechanical Engineering
KLE Technological University
Hubballi-580 031, Karnataka
sanjeev_kavale@bvb.edu

Nagaraj Ekbote
Department of Automobile Engineering
BVB College of Engineering and Technology
Hubballi-580 031, Karnataka
nagaraj_ekbote@bvb.edu

Krishnaraja G. Kodancha
School of Mechanical Engineering
KLE Technological University
Hubballi-580 031, Karnataka
krishnaraja@bvb.edu

***Abstract*— Constraint at a crack-tip/crack-front is the resistance against plastic deformation, which is induced by specimen geometry and loading conditions. The amount of constraint at the crack tip describes the fracture behavior of a material. The stress intensity factor ($K_I$) is the widely used parameter to study fracture at the crack tip. The constraint effect on the surface is referred as in-plane constraint and through the thickness as out-of- plane constraint. The level of crack-tip triaxiality is measured by triaxiality factor (*h*). In this investigation, three dimensional FE analyses on SENB specimen are performed with various crack length (*a*) to width of the specimen (*W*) ratio and specimen thicknesses (*B*). The variation of the Stress Intensity Factor and Stress Triaxiality is studied with respect to *a/W* ratio and specimen thicknesses. The results indicate that magnitudes of $K_I$ and h are dependent on specimen thickness. $K_I$and h, both are different for in plane and out of plane conditions, despite of specimen thickness and *a/W* ratio. Because of higher constraint at the centre, the material at the center fails earlier than that of the material at the surface.**

***Keywords—Stress intensity factor, Finite element method, Constraint, Stress triaxiality***

## Introduction

Constraint at a crack-tip/crack-front is the resistance against plastic deformation, which is induced by specimen geometry and loading conditions [1]. Large scale deformations at crack-tips thus necessitate modification of the single parameter description of the stress field, and such attempts are referred to belonging to the domain of constraint issue. The major effect of constraint loss is a varied fracture toughness of the material due to specimen geometry, specimen size and the loading conditions [2]. She and Guo [3] have argued that the variable fracture toughness is inconvenient in the engineering applications if the 3D out-of-plane stress level is not considered accurately. So, there exists a gap in understanding constraint effects in different state of stress and 3D cracks. The 3D triaxial stress field near the crack-front has an important role in a fracture mechanics framework [4, 5, 6]. The existing triaxial constraint effects are due to the in-plane and out-of-plane condition and both are related to the geometry and loading configuration of the cracked structure [7]. Stress Intensity Factor ($K_I$), J-integral, Energy Release Rate (*G*) and Crack-Tip Opening Displacement (*CTOD*) are the key parameters used in fracture mechanics. Stress intensity factor was proposed by Irwin [8] to describe the intensity of elastic crack-tip fields under linear elastic fracture mechanics regime. $K_I$ is used to characterize a crack by indicating the level of stresses in the crack tip region and predicting the shape and size of the plastic zone (*PZS*). In the present investigation, an attempt has been made to study the variation of Stress Triaxiality (*h*) and $K_I$ along the crack-front considering a SENB specimen geometry having varied thickness and crack length to width ratio (*a/W*) by detailed 3D finite element analysis.

## Finite Element Anlyses

In this work IF steel is considered for the analyses. The Young's Modulus of the material considered is 197000 MPa, yield strength is 155 MPa and Poisson's ratio being 0.30. The dimensions of the SENB specimen are taken as width (*W*) = 25.4mm (1 inch), height (*H*) = 2W = 50.8mm and the crack length varies as *a/W* varies from 0.45 to 0.65 in steps of 0.05. The geometric dimensions of the specimen are taken according

to ASTM E1820-16 [9], Standard Test Method for Measurement of Fracture Toughness.

A series of 2D and 3D FE analysis have been conducted to study the variation of Stress Intensity Factor on SENB Specimen using ABAQUS 6.14 [10]. Guian et al [11] have concluded that the *J* integral method and interaction integral given by ABAQUS provide consistent magnitudes of Stress Intensity Factor (SIF) when compared with the ASTM standards and thus are the most appropriate methods to determine accurate *K* values for both 2D and 3D. Computations were carried out considering only one half of the specimen geometry due to symmetry. The 3D analysis domain is discretized using 20 node quadratic brick finite elements (C3D20R) using reduced integration. This kind of element is used by other investigators [12], for 3D analyses.

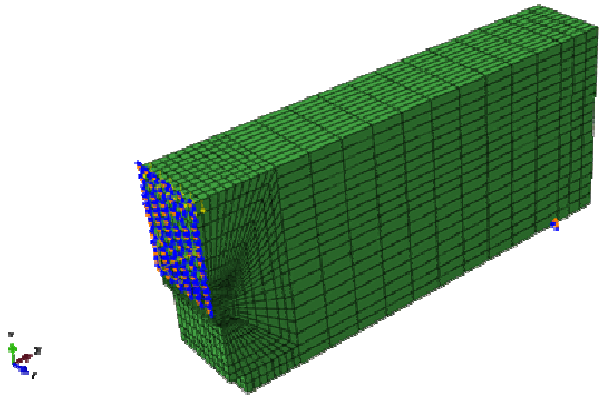

Fig. 11. 3D meshed model along with the boundary conditions

The model is generated by taking the origin at the crack tip and the fine mesh is used in the region around the crack front to achieve better results. The meshed model along with the boundary conditions are shown in the Fig. 1. The number of elements in the mesh ranged from 6980 to 7800 and number of nodes ranged from 31603 to 35225 for various *a/W* ratio and specimen thickness. The symmetrical boundary conditions have been imposed along the ligament of the specimen due to half symmetry of the model. Another boundary condition is applied where the specimen sits on the roller while actual testing. The corresponding nodes are given displacement boundary conditions of $U_y = U_z = U_{Rx} = U_{Ry} = 0$. In this study, for SENB specimen a varied crack length to width ratio of *a/W* = 0.45 to 0.65 were considered for analyses.

3D linear elastic FE analyses have been conducted on the SENB specimen of thickness 3mm, 5mm, 10mm, 12.7mm, 15mm and 25.4mm with *a/W* of 0.45 to 0.65 in steps of 0.05. The SIF is extracted for various cases by using *J* based method built in ABAQUS directly from the software. This is based on the integration integral method in which stress intensity factors are directly obtained [13].

The magnitude of the applied stress σ is calculated using the below relation.

$$\sigma = \frac{3PS}{2B(W)^2} \quad (1)$$

Where *P* is the applied load, *S=4W*, is the span of the specimen, *B* is the specimen thickness, which is considered as 1mm for 2D analysis. For 3D analysis the *B* value is varied between 3mm and 25.4mm.

## Results and Discussions

In the present work, the variation of $K_I$ and h along the crack-front for various thicknesses and *a/W* ratios are studied for 2D and 3D conditions.

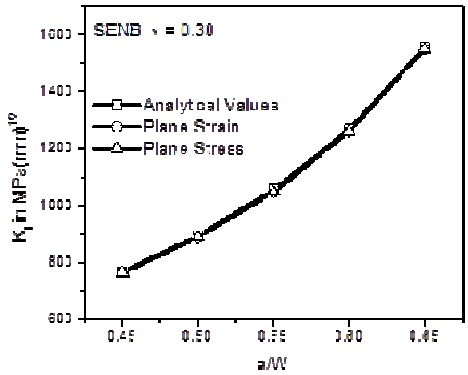


Fig. 12. Variation of 2D $K_I$ magnitudes for various a/W ratios

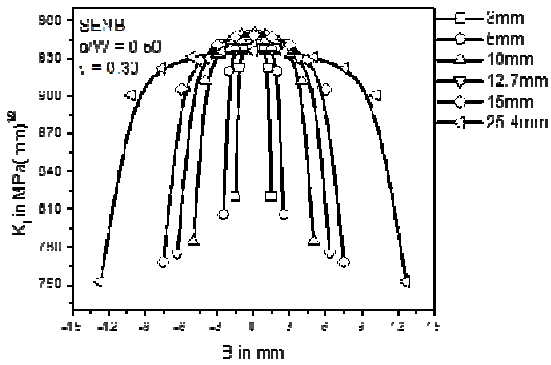


Fig. 13. Variation of $K_I$ along the crack-front for various specimen thickness.

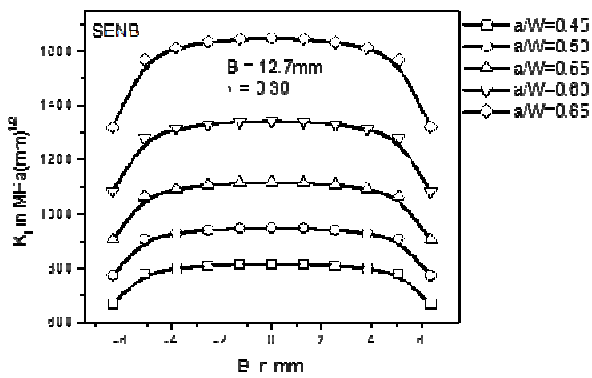


Fig. 14. Variation of $K_I$ along the crack-front for various a/W and specimen thickness B=12.7mm

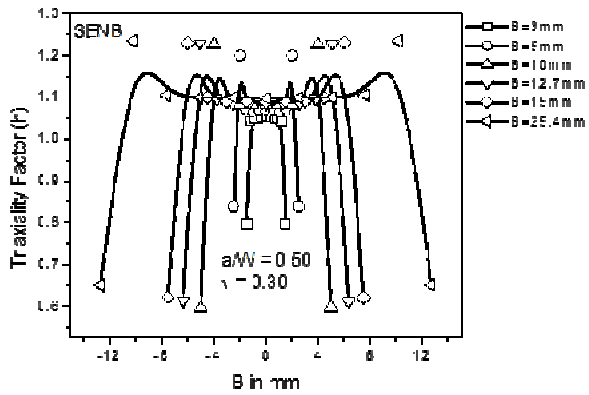


Fig. 15. Variation of Triaxiality Factor (h) along the crack for a/W=0.50 and different specimen thicknesses

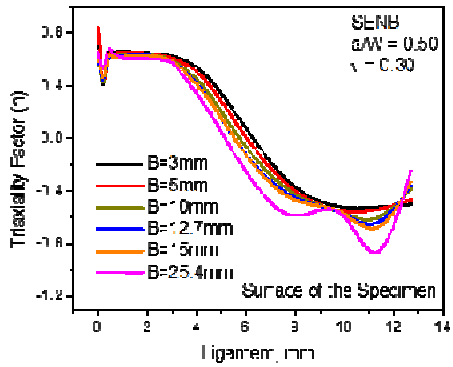


Fig. 16. Variation of Stress Triaxiality along the ligament for a/W=0.50 and different specimen thicknesses for in plane conditions.

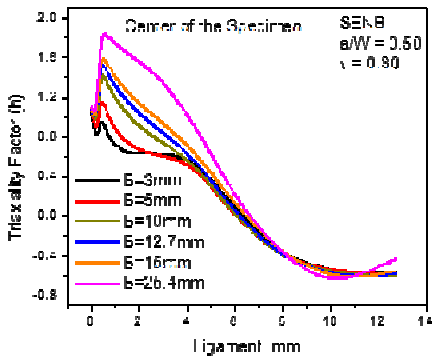


Fig. 17. Variation of Stress Triaxiality along the ligament for a/W=0.50 and different specimen thicknesses for out of plane conditions.

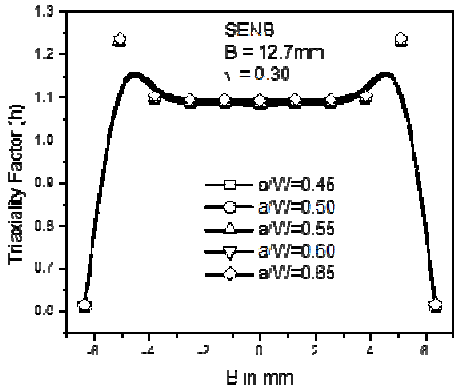


Fig. 18. Variation of Triaxiality Factor along the crack for B=12.7mm and different a/W ratios

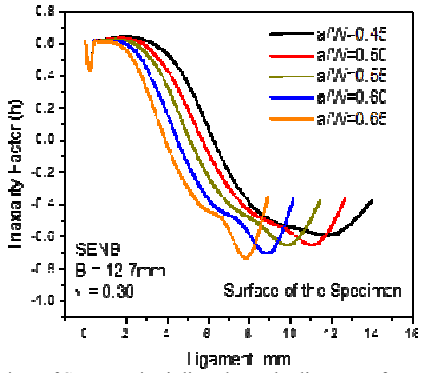


Fig. 19. Variation of Stress Triaxiality along the ligament for B=12.7mm and different a/W ratios for in plane conditions.

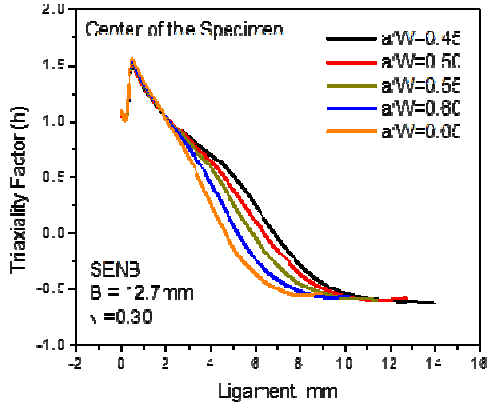


Fig. 20. Variation of Stress Triaxiality along the ligament for B=12.7mm and different a/W ratios for out of plane conditions.

The magnitudes of Stress Intensity Factor obtained for 2D analyses are validated with the analytical values available in literature [14]. 2D $K_I$ magnitudes for various *a/W* ratios under plane strain and plane stress conditions with analytical values are indicated in Fig. 2.

A typical variation of $K_I$ for different thickness with *a/W*=0.50 in 3D conditions is shown in Fig. 3. Fig. 3 demonstrates that $K_I$ varies with the thickness of the specimen. It is found that the magnitude of $K_I$ is higher at the center of the specimen than on the surface. Due to higher out of plane

constraint the material at the center of the specimen thickness fails earlier than that on the surface. The magnitude of $K_I$ increases as the thickness decreases as expected. The variation of $K_I$ for various $a/W$ are also studied. The constraint also depends on the $a/W$ ratio of the specimens and this may be due to stress triaxiality [15]. A typical variation of $K_I$ for various $a/W$ ratios with thickness, $B$=12.7mm and $\nu$=0.30 is shown in Fig. 4.

The results infer that the specimen with higher $a/W$ ratio experiences highest crack-tip constraint. Fig. 4 illustrates that the nature of variation of $K_I$ along the crack-front is almost similar for various $a/W$ ratios. However the crack-tip constraint increases as $a/W$ increases. The difference between the magnitude of $K_I$ at the center and surface increases as the $a/W$ increases, which indicates that the specimen experience high crack-tip constraint as $a/W$ increases. At this stage it is difficult to interpret such behavior. It maybe because of variation of stress triaxiality [15]. Kodancha and Kudari [15], have investigated on the variation of stress triaxiality along the crack plane and along the ligament for in plane and out of plane conditions for CT specimen. Authors have observed that triaxiality factor ($h$) is dependent on thickness of the specimen. A similar kind of observation is made in the current study also. The details about the extraction of stress triaxiality factor from the FE analyses are explained in detail by Kodancha and Kudari [15]. Fig. 5 indicates the variation of Stress Triaxiality Factor for $a/W$=0.50 and various thicknesses of the specimen. Fig. 6 and Fig. 7 indicate the variation of Stress Triaxiality Factor along the ligament for in plane and out of plane conditions for $a/W$=0.50 and various thicknesses of the specimen.

It can be observed from Fig. 5 that the Triaxiality Factor is changing along the crack across the thickness and is dependent on the specimen thickness. Same is true along the ligament for in plane and out of plane conditions, and is also dependent on specimen thickness. Fig. 8 shows the variation of Stress Triaxiality Factor along the crack for $B$=12.7mm and various $a/W$ ratios. Fig. 9 and Fig. 10 show the variation along the ligament for in plane and out of plane conditions. From figures 8, 9 and 10, it can be observed that Triaxiality Factor is almost independent of $a/W$ ratios along the crack and along the ligament. Thus Structural Integrity Assessment can be improved by providing triaxiality factor along with SIF.

## Conclusions

The major conclusions derived out of this investigation are:

- The magnitude of $K_I$ and $h$ varies along the crack-front and the variation depends on the specimen thickness and $a/W$ ratio of the specimen.
- The difference between the magnitude of $K_I$ at the center and surface increases as the $a/W$ increases, however negligible difference is observed for $h$.
- The magnitude of $h$ on the ligament for in plane and out of plane conditions varies with the specimen thickness.
- Due to higher out of plane constraint the material at the center of the specimen thickness fails earlier than that on the surface.

## REFERENCES


[7] Y. Kim, X. K. Zhu and Y. J. Chao, "Quantification of constraint on elastic–plastic 3D crack front by the J–A2 three-term solution," Engineering Fracture Mechanics, vol. 68, pp. 895–914, 2001.

[8] Y. J. Chao, S. Liu and B. J. Broviak, "Brittle fracture variation of fracture toughness with constraint and crack curving under mode I conditions," Experimental Mechanics, vol. 43, pp. 232-241, 2001.

[9] C. She and W. Guo, "The out-of-plane constraint of mixed-mode cracks in thin elastic plates," International Journal of Solids and Structures, vol. 44, pp. 3021-3024, 2007.

[10] T. Nakamura and D. M. Parks , "Three dimensional stress fields near crack front of a thin elastic plate," Journal of Applied Mechanics, vol. 55, pp. 805-813, 1988.

[11] W. Guo, "Three dimensional analysis of plastic constraint for through thickness cracked bodies," Engineering Fracture Mechanics, vol. 62, pp. 383-407, 1999.

[12] J. P. Petti and R. H. Dodd Jr, "Constraint comparisons for common fracture specimens: C(T)s and SE(B)s," Engineering Fracture Mechanics, vol. 71, pp. 2677-2683, 2004.

[13] V. F. Gonzalez-Albuixech, E. Giner, J. Fernandez-Saez and A. Fernandez-Canteli, "Influence of the T33-Stress on the 3D stress statearound corner cracksin an elastic plate," Engineering Fracture Mechanics, vol. 78, pp. 412-427, 2011.

[14] G. R. Irwin, "Analysis of Stresses and Strains near the End of a Crack Traversing a Plate," Journal of Applied Mechanics, vol. 24, pp. 361–364, 1957.

[15] "ASTME1820-16," Standard Test Method for Measurement of Fracture Toughness," American Society of Testing and Materials, Philadelphia, United States, 2013.

[16] ABAQUS User's Manual. Version 6.14, Getting Started With Abaqus: Interactive Addition, 2014.

[17] Q. Guian, V. F. González-Albuixech, M. Niffenegger and E. Giner, "Comparison of KI calculation methods," Engineering Fracture Mechanics, vol. 156, pp. 52–67, 2016.

[18] Y. Kim and B. Son, "Elastic-plastic Finite Element Analysis for Double-Edge Cracked Tension (DE (T)) Plates," Engineering Fracture mechanics, vol. 77, pp. 945-966, 2004.

[19] M. Gosz, J. Dolbow and B. Moran, "Domain Integral Formulation for Stress Intensity Factor Computation Along Curved Three-Dimensional Interface Cracks," International Journals of Solids and Structures, vol. 35, pp. 1763-1783, 1998.

[20] T. L. Anderson, Fracture Mechanics: Fundamentals and Applications, CRC: Press-Book, 2004.

[21] K. G. Kodancha and S. K. Kudari, "Stress Triaxiality dependant In-Plane and Out-Of-Plane constraint effects in a CT Specimen," in Proceedings of NAME, 2010.